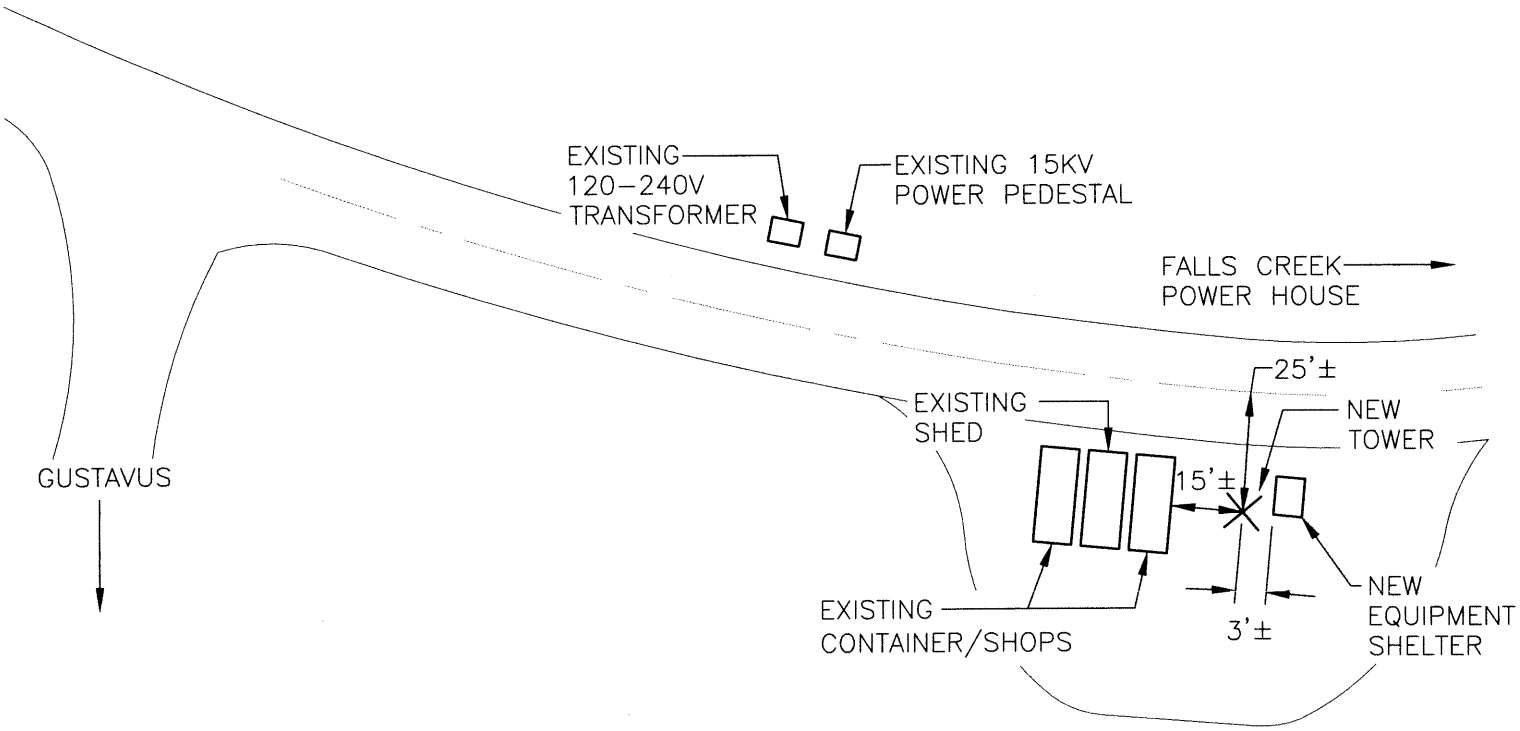

1 **SITE PLAN**
ELEV 615 FT, APPROX

GRAPHIC SCALE

0 10' 20' 40' 80'

HAIGHT & ASSOCIATES

CONSULTING
ELECTRICAL
ENGINEERS

526 MAIN STREET
Juneau, Alaska 99801
(907) 586-9788
Fax (907) 586-5774

GCN TOWER

GUSTAVUS, ALASKA

STATE OF ALASKA 49th B.C. HAIGHT EE 4800 REGISTERED PROFESSIONAL ENGINEER

DATE:	AUGUST 2009
DRAWN:	KPS
CHECKED:	BCH
PROJ NO:	275–17
SCALE:	AS SHOWN
SHEET NO:	E1

NOTES

1. DESIGN BASED ON RADIAN ROHN RSL, SELF SUPPORTING TOWER RATED FOR MODERATE LOADING–EPA ≤ 16 SQ FT WITH 100 MPH WIND (KIT NO. RSL050M307).

2. BASE SECTION (RSLBA07).

3. FABRICATE WITH PLYWOOD SURROUNDING AND FASTENED TO TOWER FROM 2 FT–10 FT ABOVE FOUNDATION.

4. STEP BOLT KIT (RSLSB50)–START ABOVE CLIMBING BARRIER AND SAFETY CABLE KIT (RSLCL050).

5. TOP MOUNT KIT (RSLTM34).

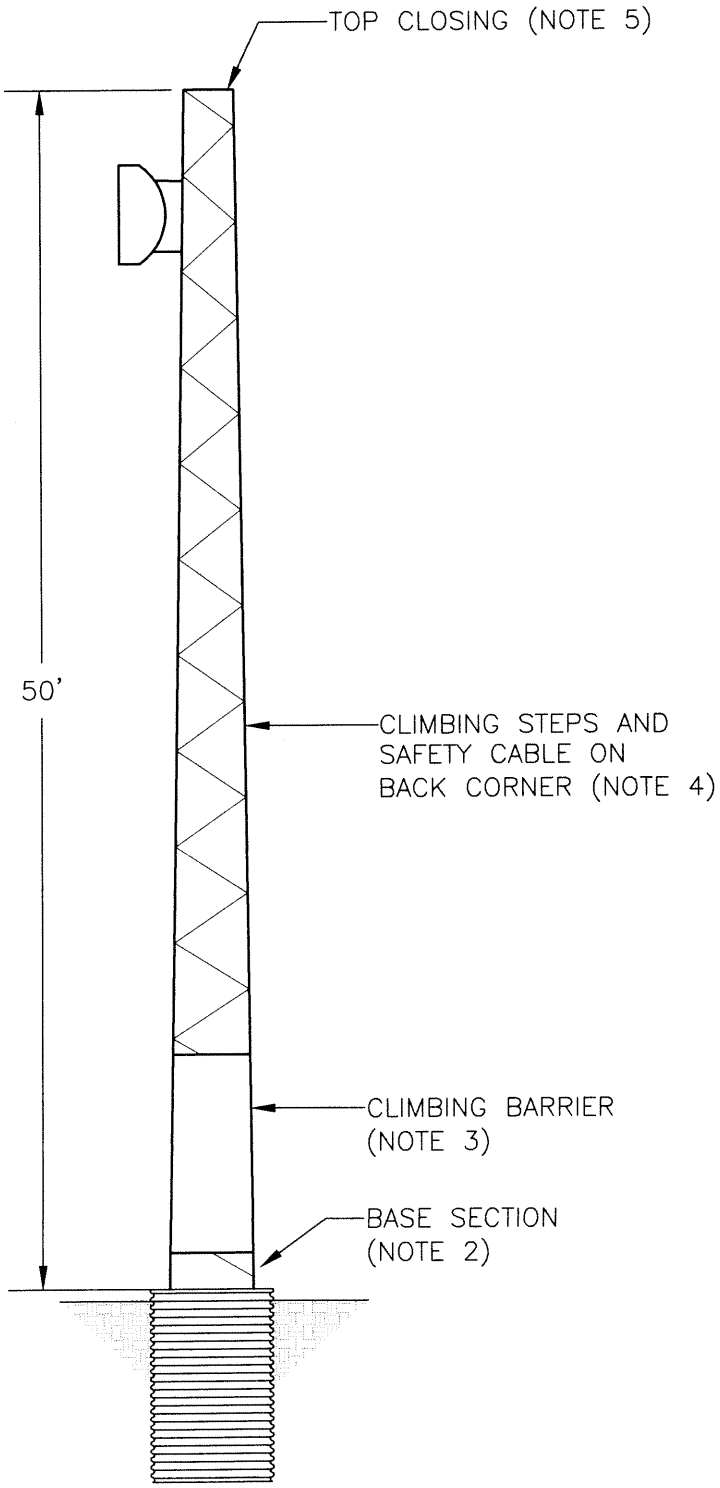

1 ELEVATION–TOWER

HAIGHT & ASSOCIATES
CONSULTING ELECTRICAL ENGINEERS
526 MAIN STREET
Juneau, Alaska 99801
(907) 586-9788
Fax (907) 586-5774

GCN TOWER

GUSTAVUS, ALASKA

STATE OF ALASKA 49th B.C. HAIGHT EE 4800 REGISTERED PROFESSIONAL ENGINEER

DATE:	AUGUST 2009
DRAWN:	KPS
CHECKED:	BCH
PROJ NO:	275–17
SCALE:	NONE
SHEET NO:	E2

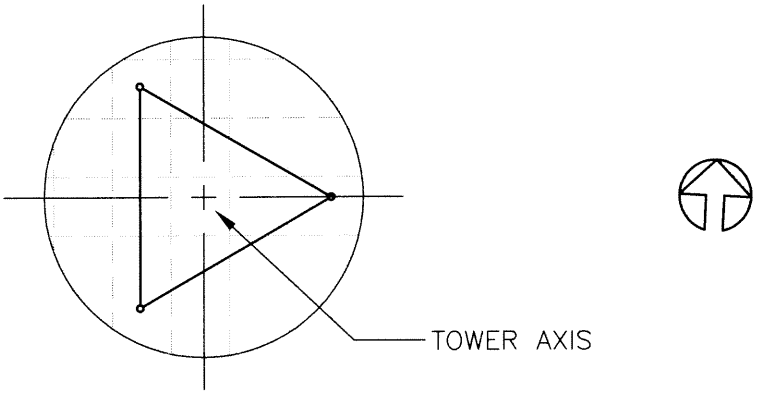

② PLAN VIEW

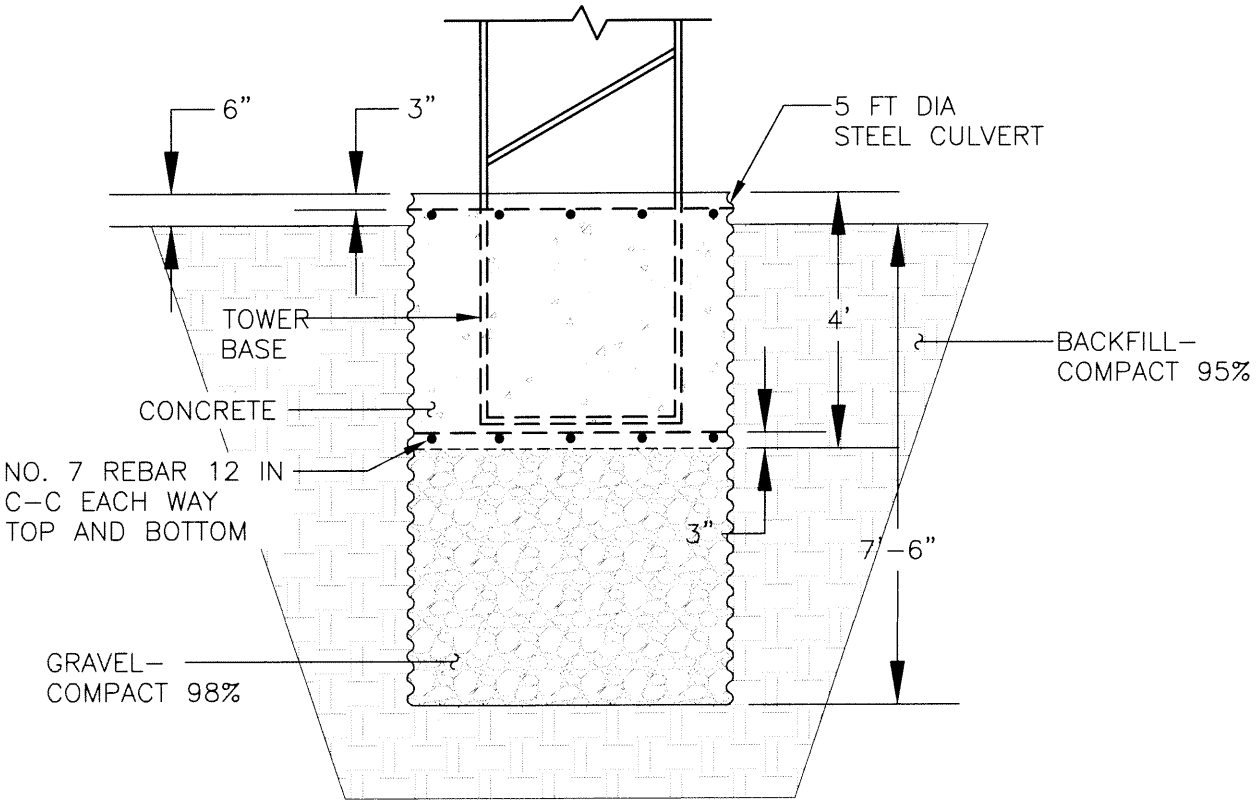

① ELEVATION

DETAIL–FOUNDATION

GRAPHIC SCALE

0 1.5' 3' 6'

HAIGHT & ASSOCIATES
CONSULTING ELECTRICAL ENGINEERS
526 MAIN STREET
Juneau, Alaska 99801
(907) 586-9788
Fax (907) 586-5774

GCN TOWER

GUSTAVUS, ALASKA

STATE OF ALASKA 49th B.C. HAIGHT EE 4800 REGISTERED PROFESSIONAL ENGINEER

DATE:	AUGUST 2009
DRAWN:	KPS
CHECKED:	BCH
PROJ NO:	275–17
SCALE:	GRAPHICAL
SHEET NO:	E3

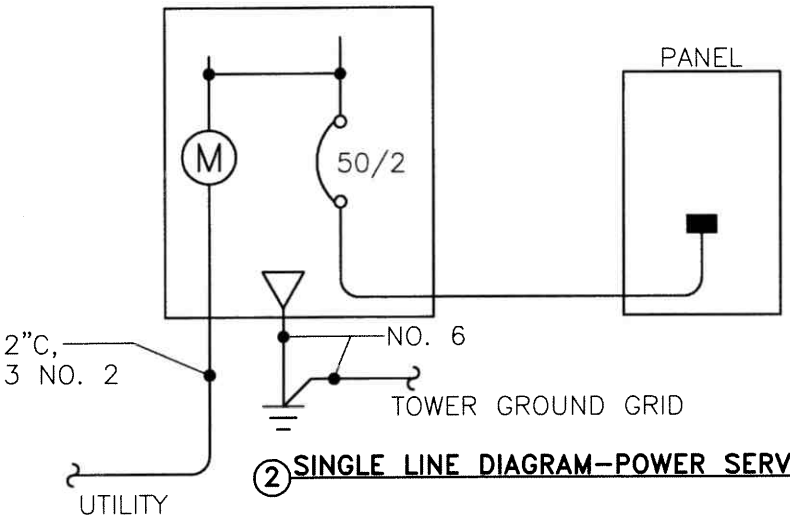

② SINGLE LINE DIAGRAM–POWER SERVICE

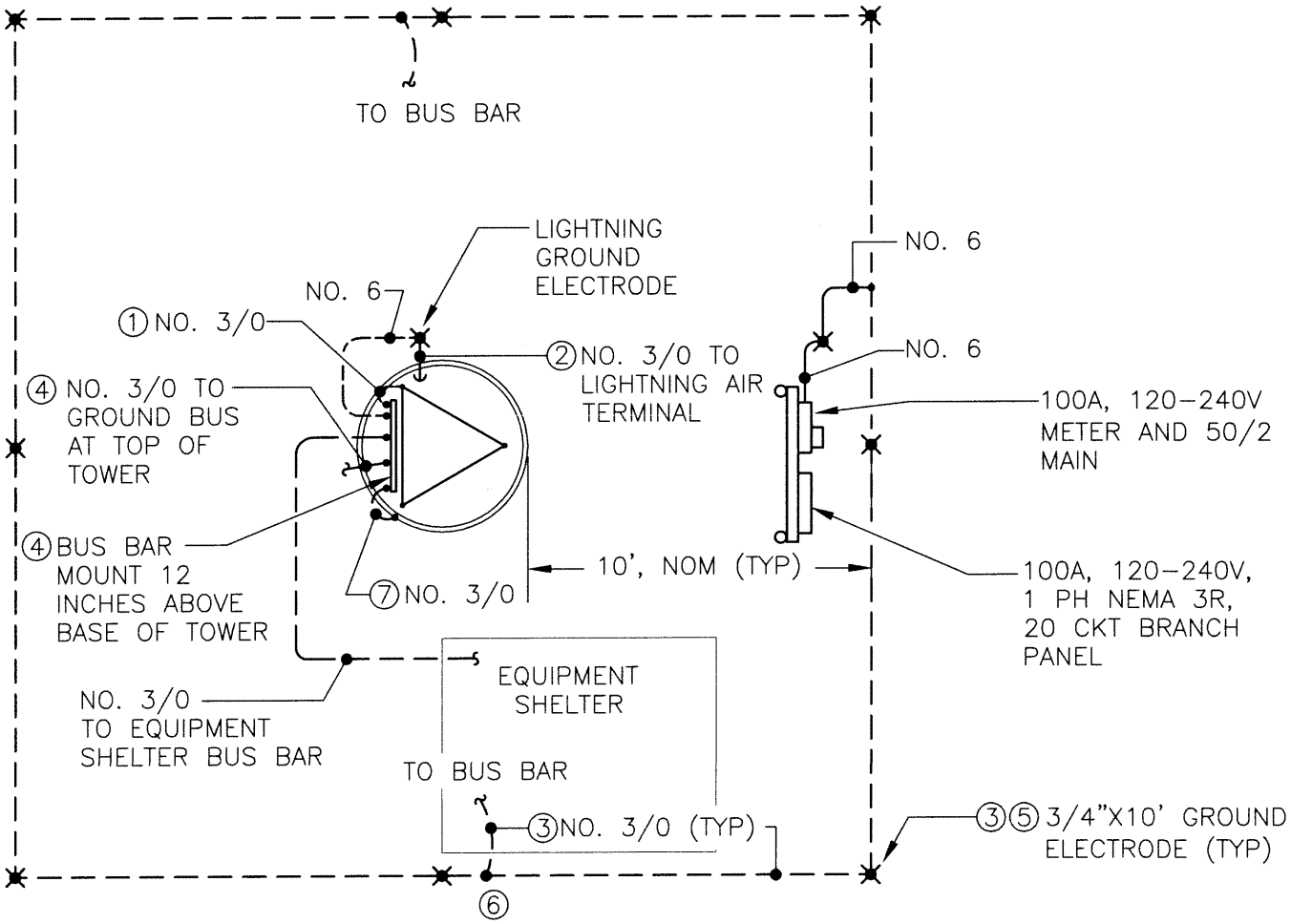

① SITE PLAN–GROUNDING SYSTEM

HAIGHT & ASSOCIATES
CONSULTING ELECTRICAL ENGINEERS
526 MAIN STREET
Juneau, Alaska 99801
(907) 586-9788
Fax (907) 586-5774

GCN TOWER

GUSTAVUS, ALASKA

STATE OF ALASKA 49th B.C. HAIGHT EE 4800 REGISTERED PROFESSIONAL ENGINEER

DATE:	AUGUST 2009
DRAWN:	KPS
CHECKED:	BCH
PROJ NO:	275–17
SCALE:	NONE
SHEET NO:	E4

NOTES

1. BOND TOWER TO GROUND BUS. UTILIZE EXOTHERMIC WELDS OR HIGH COMPRESSION FITTINGS.

2. BARE CONDUCTOR ON STANDOFFS PLACED 3–4FT APART. CONDUCTOR AS STRAIGHT AS POSSIBLE FROM LIGHTNING AIR TERMINAL TO ELECTRODE. NECESSARY BENDS WITH 24IN. RADIUS, MINIMUM. BOND CONDUCTOR TO ENDS OF AIR TERMINAL AND ELECTRODE. UTILIZE EXOTHERMIC WELDS OR HIGH COMPRESSION FITTINGS.

3. BURY ELECTRODES WITH TOPS 3–9 INCHES BELOW GRADE. BURY GRID CONDUCTOR 12 INCHES BELOW GRADE.

4. BUS BAR: MOUNT ONE AT LOWER PART OF TOWER AND ONE AT THE TOP OF THE TOWER. TERMINATE CONDUCTORS TO BUS BAR WITH HIGH COMPRESSION LUGS AND BOLTS.

5. BOND GRID CONDUCTORS TO ELECTRODES WITH EXOTHERMIC WELDS OR HIGH COMPRESSION FITTING APPROPRIATELY RATED FOR THIS APPLICATION.

6. TAP CONDUCTORS TO MAIN CONDUCTOR WITH EXOTHERMIC WELDS OR HIGH COMPRESSION FITTINGS.

7. TAP AND CONNECT FOUNDATION CULVERT TO GROUNDING SYSTEM.

HAIGHT & ASSOCIATES
CONSULTING ELECTRICAL ENGINEERS
526 MAIN STREET
Juneau, Alaska 99801
(907) 586-9788
Fax (907) 586-5774

GCN TOWER

GUSTAVUS, ALASKA

STATE OF ALASKA 49th B.C. HAIGHT EE 4800 REGISTERED PROFESSIONAL ENGINEER

DATE:	AUGUST 2009
DRAWN:	KPS
CHECKED:	BCH
PROJ NO:	275–17
SCALE:	NONE
SHEET NO:	E5