Project Title: Gustavus - Design and Build Model Last - Mile Community Broadband Network

TPS Number: 60006

Priority: 1

Agency: Commerce, Community and Economic Development
Grants to Municipalities (AS 37.05.315)

Grant Recipient: Gustavus

FY2014 State Funding Request: $2,293,849

One-Time Need

Brief Project Description:

The City wishes to build a city-owned hybrid fiber-coax network. Existing internet access options in Gustavus are inadequate for today's internet application.

Funding Plan:

Total Project Cost:	$2,433,345
Funding Already Secured:	($139,496)
FY2014 State Funding Request:	($2,293,849)
Project Deficit:	$0

Explanation of Other Funds:

City received $235,000 through CIP FY2012 for design.

Detailed Project Description and Justification:

Upgrading the community's internet service to broadband was identified as a critical infrastructure need for the City and received 'strong positive' support in the 2005 City of Gustavus Strategic Plan. The current GCN technology is inadequate and functionally obsolete. The Gustavus Community Network received design money through the CIP FY2012 designated legislative grant and hired broadband consultant ICF International to develop a broadband plan with extensive input from the community and other stakeholders. The Gustavus Broadband Plan identifies a city-owned hybrid fiber-coax network as the best business model and technology for meeting the communication needs identified by the community.

Project Timeline:

January-May 2013 Legislative Review and Approval of Funding Request
July-October 2013 RFP and Selection of Design First

Entity Reponsible for the Ongoing Operation and Maintenance of this Project:

City of Gustavus

Grant Recipient Contact Information:

Name:	Kapryce Manchester
Address:	1802 Gustavus Road Gustavus, AK 99826
Phone Number:	(907)697-2451
Email:	clerk@gustavus-ak.gov

This project has been through a public review process at the local level and it is a community priority.

CITY OF GUSTAVUS, ALASKA
RESOLUTION 2013-09

A RESOLUTION IN SUPPORT OF THE PROPOSAL TO 'DESIGN AND BUILD MODEL LAST-MILE COMMUNITY BROADBAND NETWORK

WHEREAS, city-owned Gustavus Community Network (GCN) has provided Internet service to the community of Gustavus since 1996 and has a solid record of creativity and self-sufficiency; and

WHEREAS, all existing internet access options in Gustavus are inadequate for today's media-rich Internet applications, much less for those to come; and

WHEREAS, upgrading the community Internet service to broadband has been identified as a critical infrastructure need for the City of Gustavus and received 'strong positive' support as a capital infrastructure project in the 2005 'City of Gustavus Strategic Plan'; and

WHEREAS, 84% of respondents to the DCRA sponsored 'Gustavus, Alaska: 2008 Community Survey Report' identified improvement of Internet connectivity as an important infrastructure project, placing second only to a new dock in importance on a list of 25 infrastructure projects; and

WHEREAS, broadband consultant ICF International has developed a Gustavus Broadband Plan with extensive input from the community of Gustavus and other broadband stakeholders, funded by an FY12 grant from the Alaska Legislature through the Department of Community, Commerce, and Economic Development; and

WHEREAS, the Gustavus Broadband Plan identifies a city-owned hybrid fiber-coax network as the best business model and technology for meeting the communication needs identified by the community; and

WHEREAS, the Gustavus City Council accepted the proposed Gustavus Broadband Plan by resolution on October 4, 2010,

NOW THEREFORE BE IT RESOLVED, the Gustavus City Council, in an effort to promote economic development, curb out-migration and improve community health and safety by providing the fastest, most reliable and most affordable last-mile broadband network, seeks State general fund support; and

BE IT FURTHER RESOLVED, that the Gustavus City Council supports for submission the FY14 capital request to 'Design and Build Model Last-Mile Community Broadband Network', in the amount of $2,433,345.

PASSED AND **APPROVED** by a duly constituted quorum of the city council this 10th day of January, 2013.

Lou Cacioppo, Mayor

Noel Farevaag, Vice Mayor

Jim Mackovjak, Council Member

Sandi Marchbanks, Council Member

Via Teleconference

Tim Sunday, Council Member

Phil Hawley, Council Member

Morgan DeBoer, Council Member

Attest: Kapryce Manchester, MMC
City Clerk

CITY OF GUSTAVUS
PROJECT SCOPING FORM

Version 2012.12.08

Community: Gustavus, Alaska____Contact: Kapryce Manchester, City Clerk

Address: PO Box 1, Gustavus AK 99826

Phone: (907) 697-2451 Fax:_____Email: clerk@gustavus-ak.gov

Name of Project: **Design and Build Model Last-Mile Community Broadband Network**

Contact Person: Nathan Borson

Phone: (907) 697-2810 or 697-2313 Fax: (206) 984-9439 Email: nate@corvid.info

PART I: INITIAL PLANNING PHASE:

1. What is it?

Build a last-mile hybrid fiber-coax (HFC) network capable of delivering the fastest, most reliable, and most affordable Internet access, voice communications, and entertainment services to all Gustavus and Glacier Bay homes and businesses. Leverage the 16-year experience, organization, and customer base of city-owned pioneer Internet provider Gustavus Community Network (GCN). Improve health and safety and emergency response capability throughout Icy Strait. Develop model for other community networks.

The *model last-mile community broadband network* is a forward-looking last-mile network connecting all Gustavus homes and businesses and delivering the fastest, most reliable, and most affordable Internet access available. HFC is so fast that it not only supports multiple streams of high-definition video and every other current application, it will accommodate exponential traffic growth for 15-30 years. Optional bundled voice and entertainment services provide additional value and cost savings to customers and improve the viability and sustainability of the network. Engineering, cost estimates, design work, and lessons learned during this project will be published online for the benefit of other communities.

Primary project components are the "headend" (network center added onto City Hall), the "outside plant" (buried fiber-optic and coaxial cable and pedestals throughout the community), customer equipment (cable modems and inside wiring), and the servers and routers that connect everything together and make it work. Upstream Internet access (the "middle mile") is also important to this project but will be addressed separately.

This project builds on the 16-year success of pioneering public Internet provider Gustavus Community Network (GCN). The Alaska State Library obtained a federal NTIA grant to create what was originally known as Gustavus SEAKNet. After the first year GCN was run entirely by volunteers for the Gustavus Community Association, and is now owned by the City of Gustavus and managed by local computer consultant Corvid

Computing. Since 1996 GCN has been sustained and greatly expanded entirely by volunteers and subscriber fees. No taxes or other public funds have been used to this point, but GCN cannot build this next-generation HFC network with local resources alone, nor can any private telecommunications company make a business case for such an investment.

This capital project replaces GCN's dial-up and limited wireless networks but keeps its customers, automated billing system, community portal, and customer service operation. Increased revenues from the new network will allow GCN to operate, maintain, and expand the local network, purchase additional upstream bandwidth, and build a reserve fund for expansion and equipment repairs, upgrades, replacements, and new service offerings.

2. Why needed?

The *model last-mile community broadband network* will improve Gustavus and Glacier Bay health and safety, promote economic development and diversification, curb out-migration, lower cost of living and cost of business, strengthen the local community, improve local government efficiency, transparency, and participation, and improve long-term sustainability and viability at a time when communities without broadband Internet access are being gradually cut off from modern society, marginalized, and diminished.

The importance of broadband Internet access for economic development and health and safety (i.e. telemedicine) has been well documented. Currently, the best Internet access available in most of Gustavus and Glacier Bay is 3G cellular service offered by Alaska Communications or satellite service such as StarBand or Hughes Net. These services, however, suffer from high latency, high cost, usage caps, and low performance and reliability, and neither is available throughout the city of Gustavus. With exponential growth in Internet use, the limited service available by satellite and 3G is "the new dialup," a short-term solution at best. The model sustainable community broadband network is a 15-30 year solution capable of 80,000 Kbps downloads or better, limited only by the middle mile.

3. Where originated?

The GCN Board has pursued a wireless community broadband network since 2004. The Gustavus City Council has been actively involved in the broadband quest since 2009 and has passed multiple resolutions and ordinances in support of a community broadband network. The current plan was developed by ICF International with extensive input from the local community and outside stakeholders, funded by a capital grant from the Alaska legislature via the Department of Community, Commerce, and Economic Development.

4. Plan?

Broadband Internet service is the highest-ranked unfunded capital and physical infrastructure project in the 2005 Gustavus Strategic Plan 1. It has been on the GCN Board's annual work plans every year since city incorporation. It ranked very high in the community survey DCCED performed during its 2008 3-year anniversary review of the City of Gustavus. Local funding for a wireless broadband network received a majority vote in favor (57%) in the October, 2010 Gustavus municipal election.

5. Alternatives?

Name	Description	Pros	Cons	Business plan	Cost
No Action	GCN continues to operate as is. Best Internet option for most residents is via satellite.	• Inertia	• Unsustainable; GCN operation will cease or will require subsidy. • Satellite and cellular Internet service does not meet current, much less future, need for broadband.	Yes; see current operating budget.	Possible failure of GCN and extremely limited Internet access for residents and businesses
HFC Network	City builds and owns a hybrid fiber-coax network. See detailed 2012 Gustavus Broadband Plan plan by ICF.	• "Future proof" (15-30 year life) due to vast scalability • Maximum performance and reliability • Minimum maintenance and operations	• High capital cost	Yes. See detailed financial projections in broadband plan (Attachment B).	$2,433,345
Other	ICF considered a range of technical and business options in its Deployment Options and Recommendations report (included in the Gustavus Broadband Plan).	•	• Higher cost than HFC • Lower performance and reliability than HFC	Unsustainable due to higher operating expense	$3 million or more for wireless (LTE) or all-fiber networks.

[1] 2005 Gustavus Strategic Plan, p. 52, "GCN – Upgrade to broadband Internet Access" has highest "# 5's/# No's" ranking after completed projects "Replace Salmon River boat launch ramp" and "Replace dock with freight/ferry facility." Broadband is roughly even with "Build an all-tide boat harbor/marina" using "average of all ratings" (2.95 vs3.01, respectively).

6. Selection

The HFC network is the best solution to the community's broadband needs because it delivers unmatched performance and reliability with a lifetime of 15-30 years at the lowest capital and operating cost. Under any alternative, it will have taken us a decade or more to get a community-wide broadband network. If it becomes inadequate in another decade we had better start planning its replacement as soon as it is built. Its replacement will be an HFC network. We propose to skip the intermediate solution and go directly to the long-term one.

7. Impacts

Will this project :	**No**	**Yes (+ or - effect?)**	**Maybe**
• Climate change	X		
• Streams/groundwater quality	X		
• Air quality	X		
• Soils/land quality	X		
• Fish/wildlife habitat, populations	X		
• Plant Resources (timber, firewood, berries, etc.)	X		
• Invasive or pest species			*
• Natural beauty of landscape or neighborhoods	X		
• Noise or other environmental impacts	X		
• Environmental sustainability	X		
• Hazardous substances use	X		
• Community waste stream	X		
• Light pollution at night	X		
Recreational opportunities			
• Public land use and access	X		
• Trails/waterways	X		
• Parks	X		
• Public assembly/activities		+	
Education/training/knowledge & skill development		+	
Public safety		+	
Public Health		+	
Medical services		+	
Emergency response		+	
Economic performance & sustainability		+	
• Employment of residents		+	
• Short term (i.e. construction)		+	
• Long term (operating and maintenance)		+	
• Cost of living reduction		+	
• Return on investment		+	
• Visitor opportunities, impressions, stays, purchases		+	
• Competitive business environment		+	
• Support for existing businesses		+	
• New business opportunities		+	

• Economic sustainability		+	
• Attractiveness of City to new residents/businesses		+	
City government performance			
• Infrastructure quality, effectiveness, reach (more people)		+	
• Existing services		+	
• New services		+	
• Cost of city services		+	
• Tax income to city		+	
Transportation			
• Air		+	
• Water		+	
• Roads			**
Communications			
• Internet		+	
• Phone		+	
• TV/radio		+	

* Invasive species could be spread by trenching.
** There will be disruption to roads during construction, as trenching will occur throughout the community.

In addition to possible impacts identified in the check list above, this project will have both positive and negative impacts on the other buried utilities in Gustavus, namely Gustavus Electric Co. and Alaska Communications (ACS).

- Negative effects will be the cost they incur through their obligation to locate their buried utilities and the inconvenience of sharing the easements with another buried utility. In addition, ACS may see a reduction in revenue if voice services are delivered over the HFC network and if customers cancel their 3G data service in favor of Internet access from GCN.
- Positive effects will include significantly improved management and service delivery for Gustavus Electric, including remote meter reading, interruptible power and other "smart grid" technologies, and better monitoring and management of the hydroelectric plant and the rest of their grid, as well as the general benefits every business gets from improved communications. ACS will be offered use of the local network and will be able to deliver services it cannot over its own last-mile network without making large investments (for which they have already determined they cannot make a business case). ACS may well be able to deliver service to its customers more cheaply over GCN's network than they can over their own. ACS will also be eligible to compete for the business opportunity of managing the community network once built.

8. Benefits and value in multiple areas:

- Improve health and safety.
    - Upgrade routine and emergency fixed and wireless voice and data communications.

    - Support telemedicine.
    - Provide webcams and wi-fi for mariners and aviators.
    - Expand cell phone coverage using microcells, if a cooperating carrier can be found.
    - Build a foundation that can support and interconnect all future communication technologies and systems.
- Promote economic development and diversification.
    - Provide the connectivity and access that visitors increasingly expect at the gateway to Glacier Bay.
    - Support telework, flexiplace, and virtual office arrangements, giving Gustavus residents access to a large job market.
    - Support cottage businesses that rely on business-class Internet access, such as engineers, web designers, and digital artists.
- Curb out-migration.
    - Create local job opportunities.
    - Improve access to education.
    - Improve quality of life.
- Lower cost of living and cost of business.
    - Lower communication costs.
        - Converge and bundle voice, video, and data communications. Deliver them over a single network connection and pay one monthly bill.
        - Share the best available upstream Internet access via a public utility.
    - Faster and more reliable service means less time waiting for computers. Less time waiting means higher efficiency and productivity.
    - Do more online to save on travel and shipping costs. Sufficient bandwidth and quality of service make videoconferencing and virtual presence practical.
- Strengthen local community
    - Local “radio” and “TV” channels can operate over the network.
    - Community portal improves communication and collaboration among community members.
    - Local network empowers volunteers.
- Improve local government efficiency, transparency, and participation.
    - “Broadcast” meetings from City Hall and archive them for future reference.
- Improve long-term sustainability and viability.
    - Strengthen and diversify the economy.
    - Build for scalability and longevity.
    - Keep money in the community and minimize operational costs.
- Strengthen relations with neighboring communities
    - Publish our network design, business plan, and actual operational experience for other communities to use.

9. Other projects

No other current projects depend on this project, nor does this project depend on any other. This project facilitates other *potential* projects including a communications upgrade for the Gustavus Volunteer Fire Department. This project supports the Gustavus Community Clinic through better communication with parent organization Alaska Island Community Services.

10. Outside support

Once the project is complete, it will be self-sustaining with subscriber fees; no new non-GCN infrastructure, staffing, or other operational support will be required. Indeed, the project makes self-sufficient an operation that was barely sustainable.

GCN does require some support from city clerk and city council but once construction is done that support should be little more than it was before we actively engaged them in our broadband quest, and will be more than compensated by the improved Internet access the city receives from the new network.

Due to growth in customer numbers and service provided, additional staff will be needed for administration and operation and maintenance of the network. These will most likely continue to be contracted positions and will be paid from subscriber fees as described in the Gustavus Broadband Plan.

11. Permits

Burying cable in rights-of-way requires a permit from the state Department of Transportation. The project budget includes legal and permit fees for this purpose. Construction within Glacier Bay National Park requires clearance through their compliance procedures. A review of the project may be required by the State Historic Preservation Office (SHPO) to consider its effects on Gustavus World War II-era facilities such as the roads.

12. Costs

Estimated construction cost is $2,433,345. For details, please see Attachment A, Capital Budget, in the Gustavus Broadband Plan.

Estimated annual operating cost is $56,700 (year 1) to $67,863 (year 5). Please see Attachment B, Pro Forma Financial Statements, in the Gustavus Broadband Plan.

13. Funding plan

For this project to succeed, capital costs must be from sources that do not need to be repaid. A list of possible funding sources is in the Community Assessment portion of the Gustavus Broadband Plan. The first source we will pursue will be a CIP grant from the Alaska Legislature, which funded the broadband plan project with a $235,000 grant in FY12. We may seek matching funds from city reserves or other funding sources.

All operating and future capital costs will be funded by subscriber fees as described in the operating budget in the Gustavus Broadband Plan (Attachment B).

4.1: Service Jobs:

1 to 2 full time equivalents will be needed for ongoing administration, operations, maintenance, repairs, and expansion of the community broadband network. This will

probably be several part-time positions with different specialties to provide coverage and continuity, and will likely be contracted out as is the current GCN system management.

4.2: Job creation:
It is hard to guess the number of jobs that will be created or saved by the opportunities this project creates. Undoubtedly there will be some, but we would need some special expertise to make a quantitative estimate.

4.3: Training.
The jobs created by this project will all require typical knowledge-worker skills such as general computer operation and basic Internet use. Some jobs will be highly technical, requiring in-depth knowledge of networks. Others may require artistic talent working in digital media.

4.4: Effect on local businesses.
All local businesses will be significantly affected by this project, except those having no phones or computers.

- Cost of communications will fall.
- Opportunities to connect with customers will multiply.
- Efficiency and productivity will rise.

5: Record
Please see the Gustavus Broadband Plan project web site for a detailed record of the meetings, drafts, public comments, and other steps that have gone into development of the Gustavus Broadband Plan: http://bit.ly/r48JAh

Attachments:

- Gustavus Broadband Plan: http://bit.ly/RltCzO

Gustavus Broadband Plan

Final Plan

October 4, 2012

Gustavus Broadband Plan

October 4, 2012

Cover: Aerial view of central Gustavus, with Glacier Bay in background, shows developments scattered sparsely over a flat, forested outwash plain. Photo by Sean Neilson, used by permission.

Prepared for the City of Gustavus by ICF International: http://bit.ly/H8DOXO
Accepted by Gustavus City Council October 4, 2012

©Copyright 2012 City of Gustavus, some rights reserved.
Gustavus Broadband Plan by ICF International, http://www.icfi.com/ is licensed under a Creative Commons Attribution-ShareAlike 3.0 United States License: http://creativecommons.org/licenses/by-sa/3.0/us/

Permissions beyond the scope of this license may be available at http://cms.gustavus-ak.gov/contact-info

GUSTAVUS BROADBAND PLAN

EXECUTIVE SUMMARY

The *Gustavus Broadband Plan* sets forth a detailed business plan and technical concept for a last-mile network to be built in and owned by the City of Gustavus, Alaska through the Gustavus Community Network (GCN). The term "last mile" refers to connections *within* a community, versus "middle mile" connections *between* communities. The plan is based on the appended *Community Assessment* and *Deployment Options and Recommendations Report,* which detail local background information and alternatives for meeting local communication goals.

BUSINESS PLAN

The plan estimates the one-time total project capital cost of $2,433,345 and assumes that this capital expenditure will be funded from grants or other sources that will not be repaid from operations. The financial projections show the resulting network will be self-sustaining using current practices and Internet subscriber fees, as GCN has been since 1996.

TECHNICAL CONCEPT

The proposed hybrid fiber-coax (HFC) network will replace the dial-up and very limited wireless network now owned and operated by GCN. HFC is capable of delivering a range of communication services, including data to each customer in excess of 100 Megabits/second. HFC network also provides for the lowest construction and maintenance costs, lowest 'craft sensitivity', and most adaptable post-build out. Unlike any current offering, service will be available to everyone in the community of Gustavus and capable of broadband speeds without signal latency and dropped service/connection problems attendant to satellite and other internet connections.

PROPOSED SCHEDULE

The Gustavus Broadband Plan assumes the following schedule for 2012-2015. This schedule is dependent on receiving Capital Improvement Project (CIP) funds from the Alaska State Legislature in 2013[1]:

October 2012	Acceptance of Broadband Plan Final Candidate by City Council
December 2012	GCN submits Capital Project (CIP) Funding Request to City. City submits CIP to State Legislature.
January – May 2013	Legislative Review and Approval of Funding Request
July – October 2013	RFP and Selection of Design Firm

[1] If the City of Gustavus does not receive CIP funding in 2013, this schedule will be modified.

Nov 2013 – April 2014	Final Design, Construction Bid Document Preparation, Review & Approval
June – November 2014	Construction Bid Award and Construction of Network
September – Dec 2014	Testing and initial connections to Network
January 2015	Inauguration of HFC Broadband Service in Gustavus by GCN

COMMUNITY ASSESSMENT (APPENDIX A)

The Community Assessment provides an assessment of the importance of broadband to city residents, businesses and visitors. It also assessed the local factors that determined the final broadband plan including current infrastructure, physical conditions, existing plans, stakeholder consultations, and communication goals.

DEPLOYMENT OPTIONS AND RECOMMENDATIONS (APPENDIX B)

The Options and Recommendations report outlines options and recommendations the City should consider in developing its community broadband planning efforts. It identifies and assesses last mile network technology options, businesses models and constriction financing options. Based on current plans and stakeholder consultations, it recommends an HFC network and continued city ownership. It also identifies potential funding sources for the network and recommends pursuing State of Alaska CIP funding as the most viable option.

ABOUT THIS PROJECT

The Gustavus Broadband Plan was funded as a 2012 Capital Improvement Project by the Alaska Legislature through the Alaska Department of Commerce, Community and Economic Development. It has been developed in a structured, open, and transparent process intended as a model for other community broadband planning efforts. Anyone interested in the process used, including timelines and templates, may visit the project web site: http://bit.ly/r48JAh

FINAL PLAN

Gustavus Community Broadband Plan

October 4, 2012

Prepared for:
City of Gustavus
1802 Gustavus Rd
P.O. Box 1
Gustavus, AK 99826

Table of Contents

Introduction **1**

The Need for High-Speed Internet Access 1

Broadband Plan Project Background 1

Plan for Network Funding, Permitting, Design and Construction **2**

Project Funding 2

Project Phases, Permitting, Design, and Tender for Bids 3

Construction Project Inspection, Testing and Management 3

Construction Project Timing and Schedule 3

Capital Cost Estimates 4

Environmental Review Requirements 5

Right-of-Way Permit Requirements 6

Plan for Network Operations **6**

Service Offerings and Subscriber Estimates 6

Network Management 7

Staffing Needs 9

Financial Projections 10

Technical Concept **11**

Technology and Infrastructure Architecture 11

Geography and Topography 13

Design Requirements 13

Network Diagram 14

Statement of Work for Design Engineering Services 14

Attachment A: Capital Budget **16**

Attachment B: Pro Forma Financial Statements **19**

Attachment C: Network Diagram **23**

Attachment D: Some HFC Terms Explained **24**

Appendix A: Gustavus Community Assessment **25**

Appendix B: Broadband Deployment Options & Recommendations **38**

Introduction

This document provides a plan for the construction, maintenance and operations of a municipally owned hybrid fiber-coaxial (HFC) broadband network in Gustavus, Alaska. The plan was developed by ICF International under contract with the City of Gustavus. ICF worked closely with representatives of the City's existing municipally owned dial-up and limited wireless network – the Gustavus Community Network (GCN) – in developing this plan. The pages that follow provide background on the planning process, an estimate of preferred alternative construction cost, estimates of cost of design, permitting, operation and maintenance, a plan for construction and operation of the network, and a description of the proposed HFC network sufficient to seek funding for and to allow an engineer to develop a full network design and prepare bid documents necessary for construction. This plan also discusses possible scenarios for operation of the network and strategies to mitigate cost of operation of the network.

The Need for High-Speed Internet Access

High-speed Internet access or broadband is increasingly becoming essential infrastructure for all. As the Federal Communication Commission (FCC) notes in the National Broadband Plan:

> Like electricity a century ago, broadband is a foundation for economic growth, job creation, global competitiveness and a better way of life. It is enabling entire new industries and unlocking vast new possibilities for existing ones. It is changing how we educate children, deliver health care, manage energy, ensure public safety, engage government, and access, organize and disseminate knowledge.[1]

Recognizing the importance of high-speed internet access early, the City of Gustavus has been trying to achieve a robust and viable last mile broadband network for much of the past decade. The City has been experimenting with wireless broadband solutions since 2002 when members of the GCN approved the deployment of a test network. In 2004, shortly before transferring its assets to the City and reorganizing itself as a municipal utility, GCN deployed such a test network in the Salmon River area.

In deploying its test network, GCN learned that the geographic features of Gustavus impede the travel of wireless networking signals. Despite the community's flat terrain, its ubiquitous coniferous trees make it difficult for wireless signals to deliver Internet connectivity at a capacity that resembles broadband. GCN sought to address its network's shortcomings in 2009 by applying for funding from two American Recovery and Reinvestment Act (ARRA) programs – the Broadband Technology Opportunity Program (BTOP) and Broadband Initiatives Program (BIP) – in an effort to build an enhanced wireless network. However, these applications were unsuccessful, leaving the City with no clear path forward for deploying a more sophisticated broadband network.

Broadband Plan Project Background

In light of the unsuccessful ARRA applications, the City felt it necessary to begin its broadband planning efforts anew and secured funding from the Alaska State Legislature provided via the Alaska Department of Commerce, Community, and Economic Development (DCCED) to engage a consultant capable of providing a fresh look at the community's broadband needs. In early 2012, the City selected ICF International as its broadband planning consultant and embarked on the process that culminates with this plan. To arrive at this plan, the City and ICF worked together to perform a

[1] Federal Communications Commission, Connecting America: The National Broadband Plan (2010), p. xi.

Community Assessment (Appendix A) in order to evaluate the broadband needs of Gustavus residents, business and community anchor institutions as well as develop broadband technology and business model options.

To assess the community's broadband needs, ICF staff traveled to Gustavus in April 2012 to gather input through a public forum and interviewing key community stakeholders. ICF documented the input gathered during this trip and in conversations that followed in the Gustavus Community Assessment that was delivered to the City in June and updated in August. This document makes clear that the community demands a high-capacity broadband network capable of delivering content already enjoyed in areas that are less rural and remote than Gustavus.

After completing the Community Assessment, ICF staff drew on their professional experience to identify and assess last-mile network technology options, business models, and construction financing options for a broadband solution that meets the community's needs. ICF delivered its findings in the Broadband Deployment Options & Recommendations report that was presented both at a community forum and special City Council Work Session in late June. Through this process, ICF recommended that an HFC network would provide for the lowest construction costs and maintenance costs, lowest 'craft sensitivity', most adaptable post-build out, and be most extensible to a variety of Internet-based and non-Internet based broadband communications services. ICF also recommended that the City leverage its experience operating a community network and continue operating this mode. This is due primarily to the limited profit potential of providing telecommunications services in Gustavus.[2]

At its regular July 12 meeting, the Gustavus City Council passed resolution 2012-20 stating that "the City of Gustavus accepts ICF's recommendation that the city build and own a hybrid fiber-coax network." In accordance with this resolution, this document provides estimated costs to design, bid and to construct and operate an HFC network as well as a technical description of the network along with strategies to mitigate operational costs.

Plan for Network Funding, Permitting, Design and Construction

Project Funding

Funding for the project will be sought from the Alaska State Legislature through a Grants to Municipalities (CIP) Project Request to be submitted in December 2012 by the City of Gustavus. Ten funding options are described in the "Broadband Deployment Options and Recommendations Report" in Appendix B. Of these, four are loan programs that require that the business model support the full debt repayment burden. This is not possible by any network in Gustavus which puts these sources out of reach. Five of the other programs are not practical for this project given the demonstrated need and project schedule requirements. This leaves the State Legislature's CIP funding as the most viable option for this network.

[2] As explained in the Broadband Deployment Options & Recommendations report, the rural and remote nature of Gustavus makes it relatively expensive to construct a network, and provides for relatively few customers, which makes it difficult to recoup capital and operating costs and generate a profit. As noted in the Community Assessment, Alaska Communications Systems (ACS), the incumbent local exchange carrier that serves Gustavus, stated that it had previously studied upgrading its service in Gustavus but could not produce a business case for actually doing so. Hence, the City has little choice but to construct and operate a broadband network on its own if it wishes to provide the connectivity residents and businesses desire.

Project Phases, Permitting, Design, and Tender for Bids

This plan anticipates dividing the workflow into four phases. The first phase involves the Request for Proposal (RFP) process for the Engineering Services necessary for the project. The second phase provides for the actual engineering services work. The third phase is the RFP process for the outside plant construction and any facilities improvement works that are called for in the design. The fourth phase is the actual network construction phase, including regular construction inspections, ongoing acceptance testing, and network commissioning activities.

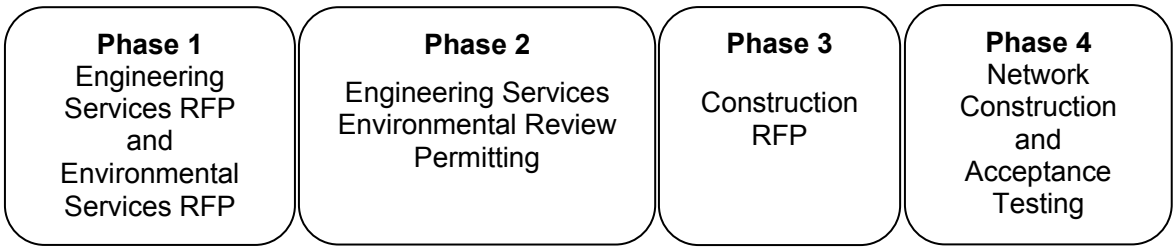

Subsequent to receipt of funding for permitting, design, and construction of the proposed HFC network, an RFP will be issued (Phase 1) to select an engineering design consulting firm to file applications and secure the necessary environmental review and Right-of-Way permits for the project. This firm will also be engaged to perform final technical design work and finalize the associated bills of materials. It will also prepare bid documentation to support a full construction RFP. This outlined scope should be completed before the start of the next construction season, if possible.

Construction Project Inspection, Testing and Management

Construction of the network will be completed by a third-party contractor engaged by the City through its established bid processes (Phase 3). The selected contractor is responsible for the construction of the network in accordance with the City approved network design and specifications. The selected contractor is also responsible for ensuring construction is per contract and is appropriately managed. GCN will inspect and monitor construction with the assistance of a consulting team experienced with HFC network construction and operation. GCN and its consultants will regularly inspect the ongoing construction and perform tests of network components to ensure that they are installed in accordance with the construction contract. GCN and its consultants will also perform such an inspection and testing once network is completed to ensure the network and all its components are working properly in accordance with the approved engineering design.

Construction Project Timing and Schedule

The executive summary for this plan contains a complete overview of proposed project schedule. This schedule envisions tender for bids in summer 2014 and completion of network and inauguration of service by January 1, 2015. A formal construction timeline will be established following the completion of a network design. GCN will include the timeline in the bid documents for network construction. Construction will be constrained by the short building season in Gustavus. As further described below, the network will require that cable be buried underground. This can be achieved most cost-effectively through plowing, which requires the ground not be at or near freezing. Based on past projects in Gustavus, there is an approximate three to four month window (from June through September) if the construction is to be completed in one building season. This requires that cable be buried at an approximate rate of five miles per week and anticipates various in-season construction delays of up to 35% of the time available. As further noted below, GCN anticipates that construction at this rate can be easily completed with two three-person construction crews.

Headend facilities will also be required. GCN expects to add approximately 160 square feet to City Hall in order to accommodate equipment needed to operate and maintain the network. Construction of the headend facility can continue without being limited by an outside-plant construction season once needed footings are poured.[3]

Capital Cost Estimates

Capital costs for the construction of the network include several components, each of which is described below along with top-level cost estimates. Detailed cost estimates are provided in Attachment A. All estimates were developed based on GCN's previous experience and the experience of GCN's broadband planning consultant, who has 35 years' experience deploying these types of networks world-wide.

Estimated Capital Costs for Gustavus HFC Network		
Underground Plant Construction[4] (45 miles mixed construction)	$	1,830,750
Final Design, Technical Specification, Design Prints		97,925
Permitting and Environmental Clearances		90,000
Wi-Fi Electronics		80,000
Customer Premises Installation Costs		92,820
Headend Construction and Operating Requirements		146,850
Construction Administration and Inspection		95,000
Total Estimated Capital Cost	$	2,433,345

- **Underground Plant Construction**. GCN intends to install the HFC network by directly burying both the coaxial and armored fiber optic cabling throughout Gustavus. As further described in the discussion of the Technical Concept, GCN estimates that the network will be comprised of 45 route miles of optical fiber and coaxial cable, including a connection to the Bartlett Cove neighborhood and Glacier Bay Lodge in Glacier Bay National Park. The coaxial portion of the network is estimated to cost just under $33,000 per mile and the fiber portion of the network is estimated to cost just under $74,000 per mile (including final design, technical specifications, and design prints). Additional construction costs include $80,000 for Wi-Fi electronics, $50,000 for environmental review activities, and $40,000 for permits, bringing the total estimated plant construction cost to $2.2 million[5]. The labor costs used herein are based on current competitive rates. Some sources of funding may impose specific labor rates (i.e., Davis-Bacon or Little Davis-Bacon).

[3] If site control issues interfere with remodeling City Hall in time for this project, the former preschool across the street from the school may house the headend.
[4] This figure includes approximately $465,000 to service the area from the NPS boundary to Bartlett Cove.
[5] This plan calls for a combination of just under 11 miles of directional boring and 35 miles of plowing for the outside plant construction. Directional boring is roughly triple the cost of plowing but is required to meet Alaska DOT depth requirements along its owned routes, and to have no adverse effect on the WWII-era roadways.

- **Final Design and Bid Tender Preparation Costs**. GCN estimates that Final Design and Permit/Environmental Review including conceptual design for preparation of final bid documents and award of construction contract during the process amounts to 10% of construction costs; approximately $187,925. $97,925 of this amount includes preparation of plan sheets with final layout, design and details, drafting of contract technical specifications and general provisions, preparation of final estimate of cost, review by the City and its technical consultant at 70% and 95% completion, opening of proposals received, and award of the construction contract.
- **Permitting and Clearances.** Right-of way permitting and State Historic Preservation Office review are expected to cost up to $40,000 and $90,000 respectively. See the following environmental review section for details.
- **Wi-Fi Electronics.** 20 Wi-Fi radios with an approximate radius of coverage of 1,000 feet each will create "hot zones" of wireless coverage in selected areas, including commercial districts.
- **Customer Premises Installation Costs**. When deploying the HFC network, GCN will install services at all premises that request installation whether they plan to use the HFC network immediately after deployment or at some point in the future (customers that sign-up for service after the network is deployed will be charged installation fees so that GCN can recoup installation costs). GCN estimates that services will be installed at 210 premises while deploying the network, at a cost of $442 each, totaling $92,820 to be spent to install services during network construction.
- **Headend Construction and Operating Requirements**. As noted above, GCN anticipates adding 160 square feet to City Hall in order to accommodate the network headend and estimates that $35,000 will be required to construct this addition. GCN estimates that $67,000 in equipment will be installed in the headend for use in management of the network and another $15,000 will be needed for tools and test equipment that will be used by GCN in deploying and operating the network. GCN will also establish an operating reserve of $30,000 to fund operating losses in the first years of network operation.
- **Construction Administration and Inspection**. GCN estimates that inspection and administration of the construction contract by the network owner during construction will require 5% of construction costs; approximately $95,000. Oversight will include RFP development for technical consultant services during final design, permit/environmental review and construction phases, vendor review and selection, network construction inspection and acceptance testing, and establishing procedures for network administration and provisioning.

Environmental Review Requirements

If GCN receives Federal funding to construct the HFC network, the project would be subject to environmental review as per the National Environmental Policy Act (NEPA). This would require the City to consider whether network construction would impact wetlands, flood plains, endangered or threatened species, or historic properties. While outside consultation will be required to shepherd the City through the NEPA process, based on GCN's prior experience, it is unlikely that network construction will be significantly impacted by Federal environmental review requirements. It is important to note that if NEPA applies, environmental review must be completed prior to ground being broken.[6]

At the state level, Alaska does not appear to have any environmental review requirements, outside of Alaska's State Historic Preservation Office (SHPO) and Tribal Historic Preservation Officer

[6] Regardless of the source of funding for construction, NEPA will apply to any construction that occurs within Glacier Bay National Park. Network construction within the Park may be eased if the National Park Service (NPS) decides to proceed with the intertie project that it is currently evaluating. If this project goes forward, GCN will work with the Park in order to ensure network components are included in intertie construction. Costs associated with NEPA compliance are not included in the construction cost estimates.

(THPO). Within Gustavus, the City requires projects to complete a scoping form with a check list of potential environmental and socio-economic impacts. GCN does not anticipate any unforeseen issues to arise in completing the City's scoping form.

Right-of-Way Permit Requirements

Certain sections of planned outside plant routes fall within the Alaska Department of Transportation and Public Facilities jurisdiction and will require issuance of associated permits for easement access. This affects approximately 10 route miles of construction. The construction along these routes may carry a minimum depth requirement, and may also involve getting clearance from the Alaska SHPO. The construction will not alter or attach to any historic sites, nor will it require any changes to historic roadways or landscapes. This plan, as outlined, will have no adverse effect, but as stated above, will likely require assistance by specialized consultants to prepare the necessary documentation.

Plan for Network Operations

Service Offerings and Subscriber Estimates

GCN can build on its existing lifeline and wireless by offering to provide three service packages, each listed in the table below. The service packages are usage-based plans that include up to 2 GB of data use per month with additional data costing $.01/MB. Three tiers are available, each offering different connection speeds. Year-round subscribers are charged a regular monthly rate that varies based on the service package. Seasonal users pay a 16.7% premium over the regular rate. GCN will continue to offer hourly, daily, and weekly Internet access via the wireless overlay for $3, $10, and $40 respectively.

GCN can also offer flat rate plans designed to accommodate users of larger amounts of data. Such a plan was previously subscribed to by the Gustavus Public Library. However, GCN does not anticipate any subscribers to such plans in the near future.

The following table contains projected package options and estimated rates for each:

Gustavus Community HFC Network Broadband Service Packages				
Service Package	**Traffic Flow Direction**	**Tier Speed**	**Seasonal Price** ($/Month)	**Regular Price** ($/Month)
Lifeline	Downstream Upstream	.12 Mbps .12 Mbps	$ 30.00	$ 25.00
Basic Broadband	Downstream Upstream	1.2 Mbps 1.2 Mbps	$ 53.00	$ 44.00
Broadband Plus	Downstream Upstream	1.5 Mbps 1.5 Mbps	$ 71.00	$ 59.00

Based on prior experience, GCN assumes that most Gustavus residents will choose the Internet service that is the fastest, least expensive, and most reliable. In August 2005, GCN had a high of

158 active dial-up subscribers (plus the Gustavus Public Library). Since then subscribership has declined due to phone line quality problems, the availability of consumer satellite Internet service, and the increased availability of mobile Internet connectivity provided via cellular phone systems. However, as Internet content has become increasingly interactive, the citizens of Gustavus have found that satellite and cellular service provide for inadequate Internet service. As such, GCN assumes that in the five years that follow construction of the network, GCN subscribership will grow towards the peak it experienced in 2005. Full subscriber estimates are provided in the table below.

Gustavus Community HFC Network Forecast Subscribers (Average Number of Subscribers Per Month)							
Service Package	**2005**	**Current Year**	**Year 1**	**Year 2**	**Year 3**	**Year 4**	**Year 5**
Lifeline	129	16	17	19	21	24	28
Basic Broadband		27	32	38	45	52	60
Broadband Plus	1	14	18	21	25	29	33
Total	130	57	67	78	91	105	121

The above table illustrates the average number of customers GCN forecasts for each month of the five years following construction of the HFC network.[7] GCN expects steady increased growth in subscribership distributed among its service packages. Based on input collected from residents and businesses and presented in the Community Assessment, GCN knows that some residents only require Lifeline services in order to access email and facilitate general web browsing. GCN further anticipates that growth in Broadband and Broadband Plus subscribership services will continue over the forecast period as residents leave their current, mostly satellite, internet service providers or upgrade from their existing dial-up POTS[8] service. GCN anticipates continued growth in Lifeline services as those who are currently getting by without any Internet service find their way on-line. Based on the Community Assessment process, it is obvious that the community is excited about the prospect of improved Internet connectivity.

Network Management

In managing the HFC network, GCN will adhere to all applicable regulations issued by the Federal Communications Commission (FCC), including its policy on network neutrality. GCN will also develop and adopt an open access policy for use by the City. The City will provide wholesale network access to qualified providers, at a fee calculated to cover the costs of operation, maintenance, and expansion of the last-mile network. The City will not subsidize any services offered directly to end-users.

GCN will adopt a network management policy with terms similar to the following:

[7] Subscriber forecasts are provided on an average monthly basis in order to account for seasonal fluctuations in the number of subscribers. Based on past experience, GCN anticipates that during summer months it will have more subscribers than during the rest of the year.

[8] "Plain Old Telephone Service"

- Internet bandwidth purchased by subscriber and delivered by GCN is the subscriber's to use as he or she chooses. GCN shall neither give preference to nor restrict any lawful content, services, applications, nor providers thereof.
- The Internet speed delivered to each subscriber shall vary between his or her pricing plan's published minimum and maximum and/or burst speeds, depending entirely on overall network load and the published speeds and priorities of pricing plans. Available Internet bandwidth shall be allocated between users first by their plan's priority and then, between subscribers to plans with equal priority, on an equally divided basis.
- Consequent Internet rate limitation or reduction for each individual user shall take place using a queuing algorithm giving equal weight to all parts of traffic flow without preference nor limitation based on source or destination IP address or port, nor based on lawful content, application, service, nor provider accessed.
- Subscribers may connect to GCN any legal devices that do not harm the network, and may share their connection among multiple simultaneous computers and users and, for usage-based plans, locations.
- Notice of any changes to this policy shall be e-mailed to all active subscribers at their billing e-mail address.

In order to alleviate congestion and overcome the fixed-rate behavior of the existing middle mile connection, GCN will employ several mitigating strategies. [9] The overarching objective is to use the GCN 1.5Mbps microwave circuit for traffic that requires low latency and guaranteed capacity, such as Voice over Internet Protocol (VoIP) and Virtual Private Network (VPN) traffic.

One mitigation strategy involves locating community-run HTTP/HTTPS servers, IMAP servers, POP servers, and DNS servers outside Gustavus. Such servers are subject to a lot of background chatter from service discovery probes and service scans that can easily consume a 1.5Mbps circuit. Subscribers to GCN's service would still have access to these types of services, and local copies and stores of data can still be maintained. GCN may also pursue operating mirror sites for these services within Gustavus, so that only administration traffic, site updates, zone file updates, and spam-filtered mail traverse the DS1 circuit.

A second mitigation strategy would involve implementing local content caching servers and internet search engine appliances. This is also designed to minimize repetitive traffic across the 1.5 Mbps middle mile link. A third mitigation strategy GCN may pursue in the future would use policy routing techniques to leverage a satellite-based internet service to provide additional bulk-traffic capacity, augmenting but never replacing the low latency fixed capacity DS1 TDM circuit. Satellite based services can be very high latency that undermines its usefulness in many applications and somewhat unreliable when compared with the existing DS1 circuit. However, some providers may offer service for a lower cost-per-bit, which could be leveraged for any bulk traffic that would not be adversely affected by the long packet delays. For example, updates to local mirror sites for common software and operating system patches can be distributed over such a link, as can data flows like streaming video content. Initial inquiries into using such a mitigation strategy appear to be cost prohibitive, but GCN will continue to investigate use of such a satellite–based middle mile link.

As GCN's network becomes more sophisticated and its subscribership increases, it is important that GCN develop goals for customer service, order fulfillment, and capacity planning in order to ensure

[9] GCN is currently using a single fixed-clock 1.544Mbps low-latency fixed speed circuit linking it to Juneau over terrestrial fixed microwave radio. While this is a guaranteed capacity circuit, it cannot presently burst above its native 1.544Mbps speed.

quality services. To that end, in operating the HFC network GCN will strive to meet the objectives specified below:

- Customer Service: Customers will be able to contact GCN via telephone or email and expect a prompt (within one hour) response during regular business hours. Selected customer service functions such as paying bills or signing up for new services can be conducted via GCN's website.
- Order Fulfillment: GCN will strive to install new services within one day provided availability of equipment (e.g. cable modems). Network outages will be addressed and resolved with all practical haste.
- Capacity Planning: GCN will capture and archive utilization data in an effort to determine network congestion, oversubscription, and throughput. On a quarterly basis GCN will analyze this data in an effort to identify potential issues before they arrive.

Staffing Needs

GCN has been operated by a contractor since 2008 after it became clear that the network could no longer be sustained by volunteers alone. The current contract requires the third-party contractor to provide services that are generally similar to those that will be required following construction of the HFC network. These services include:

- Providing customer service, including signing up new subscribers, cancelling accounts, changing services, and answering questions
- Providing technical support as needed to assist subscribers in using GCN services
- Billing subscribers in a timely fashion
- Keeping records of what subscribers owe, collect payment for services delivered, and remit payments to the City
- Managing and supervising GCN volunteers, subcontractors, and other consultants engaged in GCN operation
- Managing day-to-day GCN operation and management including responding to system outages and changes, planning and executing budgets
- Managing the network, including routing and bandwidth control to maximize Quality of Service
- Providing system administration, including access control for GCN systems
- Configuring equipment necessary for network operations, such as correctly entering settings on all GCN equipment
- Troubleshooting and repairing for resolution of outages and degraded performance or other malfunctions
- Providing network monitoring, using GCN's automated systems to portray the status of core network components
- Maintaining documentation of the system and procedures

The current contractor is paid an agreed upon percentage of customer payments less refunds for its services, a model that incentivizes the contractor to increase subscribership and ensure customer satisfaction. This model has proven successful thus far for GCN's operations and GCN assumes to employ a similar model after construction of the HFC network.

In order to operate the HFC network in a manner that meets the service level objectives described above GCN assumes it will need two locally based full-time equivalent employees. One such employee will be primarily responsible for customer service, billing, and other administrative functions, while the other employee will primarily be responsible for network maintenance and repair.

In order to meet this staffing need the City could hire new staff or, as is the current practice, employ a third-party contractor to operate GCN.

Financial Projections

Attachment B includes five year pro forma financial statements for the operations of the HFC network. Among the financial statements, most significant is the income statement which was developed based on the following assumptions:

- **Revenues**. The service offerings and corresponding subscriber projections previously discussed are the only source of revenue for the new network. In forecasting revenue, the current distribution of seasonal and regular subscribers for each service package was applied consistently throughout the forecast. Specifically, regular customers make up 85% of Lifeline subscribers, 60% of Basic Broadband subscribers, and 50% of Broadband Plus subscribers. Seasonal customers make up 15% of Lifeline subscribers, 40% of Basic Broadband subscribers, and 50% of Broadband Plus subscribers. Based on current usage, an average data overage charge of $0.27 was applied to each Lifeline subscriber and $21.61 was applied to each Broadband and Broadband Plus subscriber. GCN also assumes it will generate $3,500 annually via short-term (hourly, daily, and weekly) subscriptions; an amount similar to what is currently generated from such subscriptions.
- **Backhaul Expenses**. Middle mile service is the primary driver of operating costs. GCN currently receives middle mile service via a single T1 circuit at a cost of $1,300 per month. It is assumed that GCN will continue to receive service at this cost. It is further assumed that an additional T1 circuit will be required in the first year of HFC network operations due to an increase in the number of subscribers and an anticipated increase in the amount of data used per user per month. Because current GCN customers use on average between 2.2 and 3.7 GB of data per month, it is assumed that subscribers to an enhanced network will use approximately 4 GB per month upon HFC deployment (i.e. subscribers will use slightly more data than currently due to improved connectivity and enhanced internet service). Continued, steady growth in data usage is also assumed, but the middle mile mitigation techniques described above should allow GCN to forgo purchasing additional middle mile service for some time.
- **Network Maintenance/Monitoring**. Expenses related to network maintenance and monitoring include $1,800 annually for internet support services and $1,000 annually for network maintenance, all costs currently incurred by GCN and expected to remain constant with the deployment of the HFC network. Also included in network maintenance/monitoring expenses is an assumed charge of 12% of subscriber fees to be paid to a contractor for network management (i.e. GCN staff). This is also current GCN practice that is assumed to continue through deployment of the HFC network.
- **Utilities.** The HFC network requires power to the headend as well as amplifiers, optical nodes, and Wi-Fi nodes. GCN assumes it will have annual utility bills of $2,400 in order to power the network. The amount was determined after estimating the wattage requirements of applicable network components and multiplying the requirements by the price Gustavus Electric charges per kilowatt-hour (approximately $0.39 per). The monthly price Gustavus Electric charges per meter ($12.31 each) was also included for an estimated 9 meters.
- **Equipment Maintenance/Repair and Sales & Marketing**. Expenses related to equipment maintenance and repair, and sales and marketing are assumed to be comparable to GCN's current operations. GCN's sales expenses have been and are expected to remain fairly minimal. Equipment maintenance and repair expenses are expected to be low over the forecast period because HFC network components, particularly components in new networks, are prone to relatively long lifespans. Additionally, the capital budget developed for construction of the network includes costs that allow for GCN to procure some spare equipment for network maintenance and service outage restoration.

- **Customer Care**. Customer care expenses include fees charged by the contractor administering the network for customer service related activities. Current GCN practice is that the contractor is paid 9% of subscriber fees in exchange for customer care. This is assumed to continue through deployment of the HFC network.
- **Billing**. Billing expenses include fees charged by credit card companies when subscribers pay for services via credit cards. Current GCN practice is to assume a 5.03% of all subscriber fees will be used to cover billing expenses.
- **Corporate G&A**. Corporate general and administrative (G&A) expenses include $2,500 paid annually to the City for administrative support provided by the City Clerk, $1,200 for professional services fees, and $500 for postage and shipping. All expenses are assumed to remain flat over the forecast period.

Taking into account the sum total of the above assumptions, the pro forma income statement shows operations to have negative earnings (EBITDA) in the first year of operation. However, as subscribers continue to increase, earnings continue to grow to almost $30,000 annually in year five. These estimates do not take into account any operating reserve GCN establishes with capital funds or any capital expenditures that may occur after operations begin.

The assumptions that went into developing the income statement, as well as the figures on the income statement flow forward to the pro forma balance sheet and cash flow statement. Because GCN is a municipal utility and does not offer stock or make it a practice to generate a profit, the pro forma balance sheet and cash flow statement depict few assets, liabilities, and cash flows. The balance sheet includes only cash on hand – which is assumed to grow through the forecast period due to retained earnings – and current liabilities.[10] Similarly, the cash flow statement depicts only the effect of EBITDA (from the income statement) on current assets (from the balance sheet) to show cash on hand over the forecast period.

In summary, the financial projections depict a self-sustaining operation that generates enough surplus revenue to cover unexpected expenses or invest in improving the network as needed.

Technical Concept

Technology and Infrastructure Architecture

With its broadband planning consultant, GCN performed a comprehensive study of all the commercially viable broadband infrastructure technologies for potential application in Gustavus and determined HFC to be the most appropriate. This selection was done based on lowest construction costs, lowest maintenance costs, lowest 'craft sensitivity', most adaptable post-buildout, lowest cost-per-bit , ample capacity for future growth, and most extensible to a variety of Internet-based and non-Internet based broadband communications services.

As the name implies, an HFC network is comprised of a mixture of optical fiber networking and coaxial cable networking. Optical fiber is used to bring information content to neighborhood areas at which point the optical signals are converted to electrical signals. From there, signals are distributed to homes and businesses using lighter gauge coaxial cables. The network's lowered-voltage AC power is carried by the feeder plant coaxial cabling, but is blocked from the subscriber's drop cables.

[10] Current liabilities reflect pre-payments by customers, some of whom pay in advance for up to 6 months. The amount reflected ($1,425) provides a snapshot that, based on past experience, does not vary significantly over time.

A primary advantage to HFC is in its use of optical fiber trunking to limit the number of cascaded amplifiers versus an all-coaxial system. Another advantage is that it is far easier and far less costly to expand than an all-fiber system, without any practical reduction in per-subscriber bandwidth. Limiting active device cascades constrains the amount of noise and distortion that builds up as signals are transported through the cascaded active equipment in network (fiber optic systems also add noise and distortion). This also yields higher reliability since there are fewer components in any given path that can fail. According to what is herein specified, the cascades will be limited to five actives, but typically two. This is expected to provide “four-nines” reliability (99.99% uptime), assuming that mean-time-to-repair times are in line with industry averages.

The middle mile connects to the last mile network at the headend. The headend does not have to be centrally located, but all the last mile fiber plant terminates there. The headend location is chosen based on economy, which includes technical network efficiency and cost considerations.

For Gustavus, the most logical headend placement is somewhere near City Hall. Fiber to facilitate the middle mile connections will run from the headend to the existing middle mile microwave site near the school, and also from the headend down to the marine dock facility. This is partly in anticipation of an eventual undersea fiber landing there, and partly to provide general purpose wireless access and security monitoring services at the dock facility. These middle mile interconnects will be implemented as dedicated fiber strands within the fiber trunk cable.

The principle last mile fiber trunk routes will be along all the existing paved roads, but in some cases will extend along some unpaved road routes. GCN estimates five to seven fiber nodes to be placed along these routes, from which the coaxial feeder plant will begin. Note that in most cases, coaxial feeder cable will be co-located with fiber trunk cable.

GCN estimates the total fiber plant to be ten route miles, built using 24 strand count fiber cable. The coaxial feeder plant will serve clusters of premises. While HFC itself can support clusters of a hundred or more premises per node, the sparse population in Gustavus dictates the number of premises per node will be governed geographic by area rather than premises counts. GCN estimates the feeder plant to be 35 route miles built using two industry-standard diameters for the coaxial feeders, 0.875” (875) and 0.625” (625).

Power supplies are usually placed in areas that are easily accessible and electrically efficient. The number required will be driven by the power loading and cable loop resistance, which GCN estimates will be one power supply per fiber node. These can be either simple ferroresonant supplies, or standby supplies, but it is expected the City will use standby supplies.

Premises will be connected using semi-rigid RG7 cabling. While higher cost than more the typically deployed foil/braid RG6 or RG11 types, RG7 has advantages of better loss performance and far better reliability and durability. The drop lengths in Gustavus will be sufficiently long to warrant using semi-rigid RG7. GCN expects to use approximately 63,000 feet of RG7 connecting subscribers (210 subscriber drops at an average of 250 ft. each plus some spare cable).

In order to compensate for signal loss over the coaxial cabling, distribution amplifiers are used to boost signals along the routes. These amplify signals in both directions, downstream and upstream, and are placed along the various routes. They are housed in outside plant pedestals. GCN estimates 100-125 distribution amplifiers will be needed.

The coaxial cable network is split along its route using directional couplers and line splitters, and along with power inserters are known collectively as line passives. Signals are bridged between feeder plant and subscriber drops using directional taps (or simply ‘taps’), which are a variant of line splitters/couplers. These devices are also housed in outside plant pedestals. These are typically placed at intersections of driveways and cable route roadways. GCN estimates needing 400 pedestals for distribution passives and taps.

An additional advantage to HFC is the ease with which carrier-grade Wi-Fi can be added to the network. GCN has been using Wi-Fi but its performance has been challenged by distance and foliage. Environmentally hardened, multi-radio "carrier grade" Wi-Fi transceivers are readily available for direct deployment in HFC networks. These are powered via the coaxial distribution plant just like any other active HCF equipment and have a reliable radius range of 500 to 1,000ft. Since the Gustavus network will be underground, the Wi-Fi transceivers will be mounted in pedestals with exposed antennas (better performance) or inside radio-permeable pedestals (better aesthetics). The ground-based position may have an advantage in that most of the path absorption in Gustavus is from the coniferous trees. This Wi-Fi overlay strategy keeps the radius range modest while propagating from positions below the dense foliage line. While the initial plan includes Wi-Fi coverage in the most popular areas and densely populated neighborhoods, ubiquitous coverage can be added easily in the future.

Geography and Topography

Geography and topography strongly influence outside plant construction. Fortunately, Gustavus is relatively flat, and the soil conditions are favorable to the underground construction technique known as plowing. GCN estimates plowing 30 to 35 route miles for both fiber trunk and coaxial feed plant.

In order to keep construction costs to a minimum, GCN intends a plant burial depth of 18 to 24 inches, typical for HFC networking. While it is common to see long-haul fiber cabling buried to a depth of 36 inches, GCN does not feel that this is appropriate for Gustavus. It will drive initial costs unnecessarily high, and complicate maintenance and future plant extensions and alterations. These facts, and the extremely low risk of damage at this depth in Gustavus, make going deeper seem unjustified. Alaska Department of Transportation roadway as-built records show the existing telecommunications cables are at a depth of 12 to 18 inches, and in some places as shallow as 4 inches.

Design Requirements

As a basis for developing the necessary scope of work for any future design and construction contract, GCN has established a minimum set of criteria for bit construction and engineering design activities. This list will be refined in any actual Request for Proposal effort, but is included here to establish a foundational guideline.

Construction

- Plowing 35 route miles along non-state-owned roadways for fiber trunk and coaxial feed plant, to a general depth of 24 inches;[11]
- Directional Boring with conduit for 10 route miles along state roadways for optical fiber and coaxial feed plant, to a general depth of 36 inches;[10]
- Cable drop construction underground, plowed to a depth of 6 to 12 inches;
- Steel or Composite (UV-safe) Pedestals;
- Direct bury construction (no conduit unless built using the directional boring method).

[11] Plowing is the optimal construction option for Gustavus, based on cost, time line, and safe plant depth requirements. Two other techniques – directional boring and trenching – are considerably higher cost, more time-consuming. The plan recommends plowing for non-State owned routes, and directional boring for routes along state-owned roadways.

Signal Design

- Fiber cable of single-armor, 24-strand count, flooded, suitable for direct-bury applications;
- Coaxial Cable 0.875 and 0.625 of using a flooded, direct-bury type;
- Connectors and passives with an upper frequency range of 1GHz;
- Bi-directional RF Amplifiers, sub-split, 5MHz-45MHz / 54MHz -1GHz (downstream passband);
- Distribution amplifier design spacing at 550MHz, optionally at 750MHz;
- Target directional tap output levels of +18dBmV[12] at 550MHz. Feeder plant will be passively equalized as necessary to limit any drop's reverse tilt to no more than15dB.

Network Diagram

Attachment C provides a 'red line' conceptual design of the HFC network. This design provides an approximate idea of the coaxial and fiber routes and how distribution amplifiers and power supplies are distributed throughout the network. The design highlights that fiber will be buried along each of the major roads in Gustavus (Gustavus Road, State Dock Road, and Mountain View Road). Fiber will also be buried along Wilson Road, terminating approximately at its transition to Rink Creek Road. Coaxial cable will branch off from the fiber in order to reach premises.

The design also shows optical fiber running to Bartlett Cove. The overall architecture will be the same as for the rest of the network. The coaxial distribution system will be dimensioned to serve 100 percent of the homes and businesses passed.

Statement of Work for Design Engineering Services

In order to complete the design phase of this project, GCN will engage an engineering firm to fully perform the scope of work provided below. The technical capabilities of the selected firm will include experience with the following:

- HFC sub-split design with networks through 1GHz
- Computer-aided mapping and design
- Optical network design
- Working with three major equipment vendors for each of device classes:
  - Electrical and optical active equipment
  - Electrical and optical passive equipment
  - Coaxial and optical fiber cables
  - Headend signal processing equipment
  - Outside plant construction hardware
- Construction Permitting[13]
- Environmental clearances

The firm engaged to provide engineering will provide the following services and deliverables:

- Full optical and electrical distribution system final design

[12] Subject to final design calculations
[13] Construction permits are often issued on a time-limited basis and the construction contractor may be best suited to prosecute the specific applications but the engineering firm will be required to perfect the applications, as required.

- Number and approximate locations of all power supplies (exact placement will be determined in cooperation with Gustavus Electric)
- Radio Signal Leakage CLI Form 320
- Design verification report
- Designed operating signal levels for optical nodes and amplifiers
- Designed voltage at all active components and current load at each power supply
- Bills of Materials for all construction equipment and supplies
- Bills of Materials for headend equipment
- Technical Specifications
- General Provisions to be used for tender package
- Proposed rack elevations for headend equipment
- Interconnection diagrams for headend equipment

All documentation deliverables should be in these three forms:

- Native electronic design computer file in DXF/DWG, XLSX, DOC, and so on, as appropriate
- Searchable electronic image format (such as ePub or PDF)
- An appropriate hardcopy paper format

Attachment A: Capital Budget

The total estimated capital budget for GCN's HFC network amounts to $2,433,345. The tables that follow provide detail on the budget for Underground Plant Construction (including Construction Management/Oversight), Installation Costs, and Costs for Headend Construction and Operating Requirements.

Underground Plant Construction

Per Mile Construction Costs	Coaxial Cable	Fiber Optic Cable
Hardware & Pedestals	1,896	8,650
Fiber Cable	0	5,318
Coaxial Cable	5,397	0
RF Electronics & Connectors	3,335	0
Opto-Electronics	0	1,780
Contract Construction[14]	18,480	55,540
In House Cap Labor	2,430	1,404
Total Construction Cost Per Mile	$ 31,538	$ 72,692
Miles of Construction	35	10
Total Underground Plant Construction		$ 1,830,750
Other Construction Costs		
Final Design, Technical Specification, Design Prints		97,925
Right-of-Way Permitting		40,000
SHPO Compliance Documentation		50,000
Wi-Fi Electronics (20 access points @ $4,000 each)		80,000
Construction Administration and Inspection (10% of per-mile costs)		95,000
Total Plant Construction Costs		$ 2,193,675

[14] Fiber construction and co-located coaxial cabling will use directional boring and conduit, whereas coaxial cables along non-State owned roadways will use direct plowing. This anticipates a 36" depth requirement along the state-owned roadways and should greatly reduce or eliminate environmental impact issues.

Customer Premises Installation Costs

Installation Components	Cost Per Premises
Premises Cabling	$ 60
Premises Hardware/Modem	100
Premises Contract Labor	250
Premises In-House Labor	32
Total Per Premises	$ 442
Premises Count	210
Total Project Premises Installation Costs	$ 92,820

Costs for Headend Construction and Operating Requirements

Description	Qty.	Each	Total
Headend Facility Construction	--	$ --	$ 35,000
Headend Electronics			
UPS	1	2,000	2,000
Forward Laser	6	800	4,800
Return Receiver	6	500	3,000
Chassis with power supply	1	1,500	1,500
Amplifier	1	150	150
Passives (lot)	1	500	500
CMTS (C3)	1	5,000	5,000
Server	1	2,000	2,000
Equipment Racks (acoustically damped)	2	3,500	7,000
AC Plug strip	2	100	200
Fiber entrance cabinet/patch	1	750	750
Fiber jumpers	20	12	240
Middle mile mgmt. equip.	1	40,000	40,000
Headend Electronics Total			67,140
Tools and Test Equipment			
Fusion splicer	1	7,500	7,500
Cleaver	1	185	185
Stripper	1	30	30
Cleaners	1	50	50
Laser source	1	995	995
Laser power meter	1	450	450
OTDR	1	5,500	5,500
Tools and Test Equipment Total			14,710
Operating Reserve	--	--	30,000
Total Headend Construction & Operating Prerequisites Costs			$ 146,850

Capital Cost Summary

Total Plant Construction Costs	$	2,193,675
Customer Premises Installation Costs	$	92,820
Headend Construction and Operating Requirements	$	146,850
Total project capital costs	**$**	**2,433,345**

Attachment B: Pro Forma Financial Statements

Income Statement

	Forecast Period				
	Year 1	Year 2	Year 3	Year 4	Year 5
REVENUES					
Network Services Revenues	54,784	63,639	74,385	85,444	97,667
Other Operating Revenues	-	-	-	-	-
Total Revenues	$ 54,784	$ 63,639	$ 74,385	$ 85,444	$ 97,667
EXPENSES					
Backhaul	31,200	31,200	31,200	31,200	31,200
Network Maintenance/Monitoring	9,974	11,037	12,326	13,653	15,120
Utilities	2,400	2,400	2,400	2,400	2,400
Equipment maintenance and repair	1,000	1,000	1,000	1,000	1,000
Sales/Marketing	240	240	240	240	240
Customer Care	4,931	5,727	6,695	7,690	8,790
Billing (Credit Card Charges)	2,756	3,201	3,742	4,298	4,913
Corporate G&A	4,200	4,200	4,200	4,200	4,200
Other Operating Expense	-	-	-	-	-
Total Expenses	$ 56,700	$ 59,005	$ 61,803	$ 64,681	$ 67,863
EBITDA	$ (1,917)	$ 4,634	$ 12,583	$ 20,763	$ 29,805

Balance Sheet (Assets)

	Historical 2012	Forecast Period Year 1	Year 2	Year 3	Year 4	Year 5
Current Assets						
Cash	$ 12,014	$ 10,097	$ 14,731	$ 27,314	$ 48,077	$ 77,882
Marketable Securities	-	-	-	-	-	-
Accounts Receivable	-	-	-	-	-	-
Other Current Assets	-	-	-	-	-	-
	-	-	-	-	-	-
Total Current Assets	$ 12,014	$ 10,097	$ 14,731	$ 27,314	$ 48,077	$ 77,882
Non-Current Assets						
Amortizable Asset - Net	-	-	-	-	-	-
Plant in Service	-	-	-	-	-	-
Accumulated Depreciation	-	-	-	-	-	-
Other Non-Current Assets	-	-	-	-	-	-
Total Non-Current Assets	-	-	-	-	-	-
Total Assets	$ 12,014	$ 10,097	$ 14,731	$ 27,314	$ 48,077	$ 77,882

Balance Sheet (Liabilities & Equity)

	Historical	Forecast Period				
	2012	Year 1	Year 2	Year 3	Year 4	Year 5
Current Liabilities						
Accounts Payable	$ -	$ -	$ -	$ -	$ -	$ -
Current Portion - Long Term Debt	-	-	-	-	-	-
Other Current Liabilities	1,425	1,425	1,425	1,425	1,425	1,425
	-	-	-	-	-	-
Total Current Liabilities	1,425	1,425	1,425	1,425	1,425	1,425
Non-Current Liabilities						
Long Term Debt	-	-	-	-	-	-
Other Non-Current Liabilities	-	-	-	-	-	-
	-	-	-	-	-	-
Total Non-Current Liabilities	-	-	-	-	-	-
Total Liabilities	$ 1,425	$ 1,425	$ 1,425	$ 1,425	$ 1,425	$ 1,425
Equity						
Capital Stock	-	-	-	-	-	-
Additional Paid-In Capital	-	-	-	-	-	-
Patronage Capital Credits	-	-	-	-	-	-
Retained Earnings	10,589	8,672	13,306	25,889	46,652	76,457
	-	-	-	-	-	-
Total Equity	$ 10,589	$ 8,672	$ 13,306	$ 25,889	$ 46,652	$ 76,457
Total Liabilities and Equity	$ 12,014	$ 10,097	$ 14,731	$ 27,314	$ 48,077	$ 77,882

Cash Flow Statement

	Historical 2012	Forecast Period Year 1	Year 2	Year 3	Year 4	Year 5
CASH FLOWS FROM OPERATING ACTIVITIES						
Net Income (Loss)	-	(1,917)	4,634	12,583	20,763	29,805
Add: Depreciation	-	-	-	-	-	-
Add: Amortization	-	-	-	-	-	-
Changes in Assets and Liabilities:	-	-	-	-	-	-
Accounts Receivable	-	-	-	-	-	-
Other Current Assets	-	-	-	-	-	-
Other Non-Current Assets	-	-	-	-	-	-
Accounts Payable	-	-	-	-	-	-
Other Current Liabilities	-	-	-	-	-	-
Other Non-Current Liabilities	-	-	-	-	-	-
Net Cash From Operating Activities	$ -	$ (1,917)	$ 4,634	$ 12,583	$ 20,763	$ 29,805
CASH FLOWS FROM FINANCING ACTIVITIES						
Proceeds from Sale of Equity	-	-	-	-	-	-
Proceeds from Grant	-	-	-	-	-	-
Proceeds from Debt	-	-	-	-	-	-
Repayments of Debt	-	-	-	-	-	-
Payments of Patronage Capital Credits	-	-	-	-	-	-
Payments of Dividends	-	-	-	-	-	-
Net Cash From Financing Activities	$ -	$ -	$ -	$ -	$ -	$ -
CASH FLOWS FROM INVESTING ACTIVITIES						
Capital Expenditures	-	-	-	-	-	-
Additions to Amortizable Assets	-	-	-	-	-	-
Change in Marketable Securities- Net	-	-	-	-	-	-
Net Cash From Investing Activities	$ -	$ -	$ -	$ -	$ -	$ -
Increase (Decrease) in Cash	-	(1,917)	4,634	12,583	20,763	29,805
Ending Cash	$ 12,014	$ 10,097	$ 14,731	$ 27,314	$ 48,077	$ 77,882

Attachment C: Network Diagram

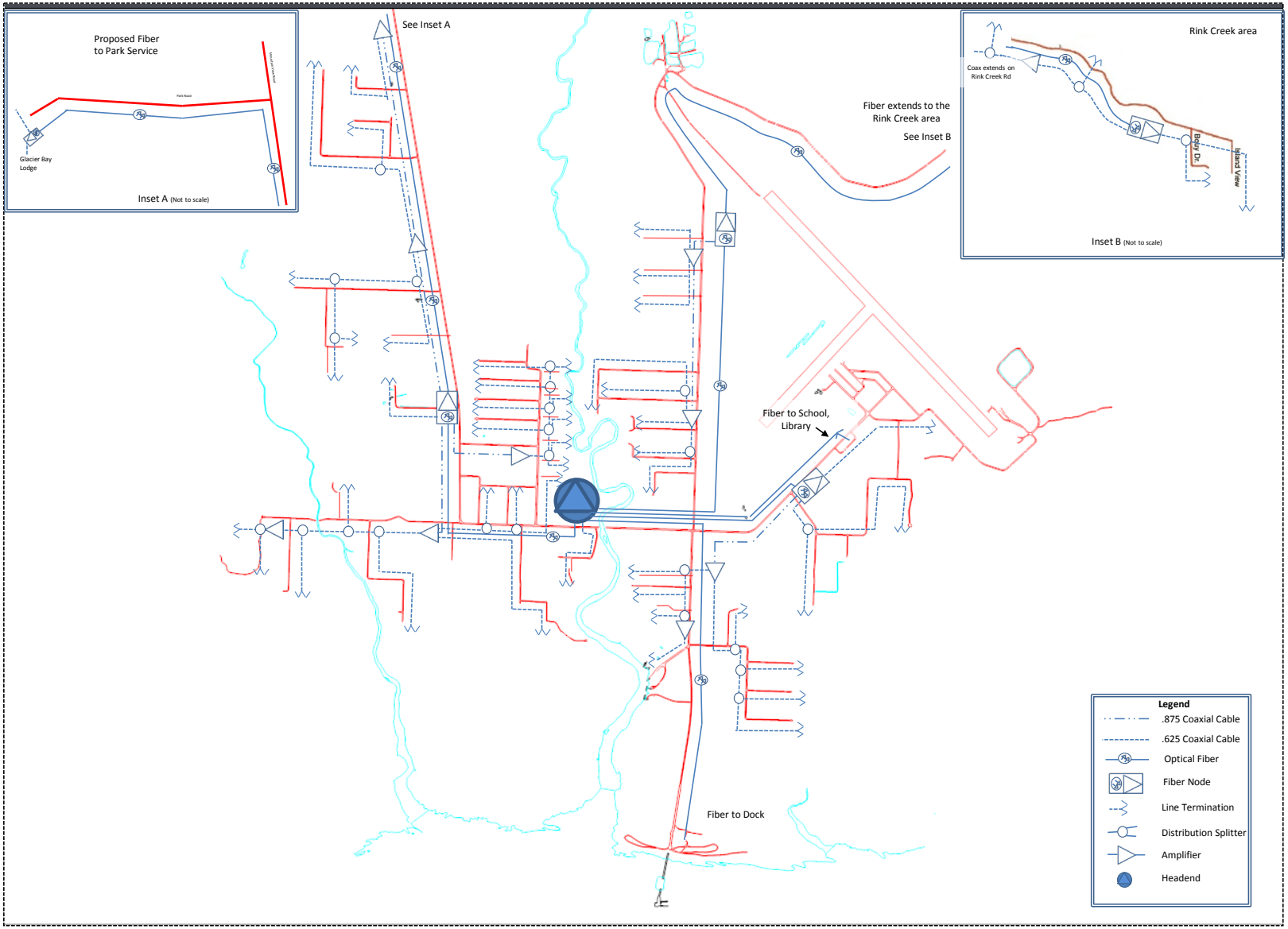

Attachment D: Some HFC Terms Explained

A quick overview of some essential HFC terminology and technical concepts are given below. These are intended to help non-technical readers to better understand the technical sections:

- Devices that convert between electrical and optical signals are commonly called ‘optical nodes’ and the places where they are located are called ‘node locations’.
- The fiber plant is commonly called the ‘fiber trunk’ or ‘fiber plant’ and the large diameter coaxial cable networking is known as ‘distribution plant’, ‘feeder plant’, or simply ‘feeder’.
- The lighter gauge coaxial cabling that connects each premise to the ‘feeder plant’ is called a ‘subscriber drop’ or simply ‘the drop’. The cable itself is called ‘drop cable’.
- HFC feeder systems carry their own medium voltage 60VAC/60Hz AC power over the feeder plant coax cables, right along with the electrical communications signals. The devices that convert the secondary 120VAC/240VAC voltage to 60VAC are called ‘power supplies’. These devices can have battery backup built-in, and if so, are called ‘standby supplies’.

Appendix A: Gustavus Community Assessment

The following information was gathered during ICF International's Gustavus Community Assessment process. The results of the assessment were included in the development of the Recommendations Report submitted to the Gustavus City Council on June 27, 2012. The community assessment helped to drive the recommendations and will be continually updated as the City of Gustavus evaluates its options for a robust last mile broadband network.

Last-Mile Broadband Purpose and Need

The City of Gustavus has been trying to achieve a robust and viable last mile broadband network for many years. In 2009, the City of Gustavus submitted applications for this network under both the Broadband Technology Opportunity Program (BTOP) and Broadband Initiatives Program (BIP) American Recovery and Reinvestment (ARRA) programs, but the applications were not selected for funding. Gustavus then received $235,000 from Alaska Legislature, through the Department of Commerce, Community, and Economic Development, to develop a plan for a last mile broadband network. This assessment is a part of that planning process.

The City is performing this Community assessment as a part of the last mile broadband planning process. Its purpose is to assess the importance of broadband to city residents, business and visitors while also assessing the local factors that will determine the local broadband plan. Through this process, Gustavus has set local goals regarding last-mile networking. In the past, the City has tried many different mechanisms to achieve quality broadband service, but none have been successful in creating a network with the speed and bandwidth required to access today's global marketplace. The community strongly believes that they require the same broadband that other more populous and less remote areas have. Despite their best efforts with designing and implementing different types of network and applying for funding for last mile solution, they remain unserved/under-served.

Existing Plans, Standards, and Goals

ICF performed a comprehensive evaluation of previous efforts by the Gustavus Community Network (GCN) to obtain funding for a last mile network including reviewing the National Broadband Plan, previously submitted City of Gustavus BTOP and BIP applications, evaluating version one of the Connect Alaska Broadband Map (and the subsequent version the Map), evaluating the future plans for a broadband middle mile network in the State of Alaska via the South East Conference, evaluating Alaska Communications Systems (ACS) Universal Service Fund (USF) contribution for landline telephone service to the residents of Gustavus and held teleconferences with the City's Project Manager, Nate Borson. Assessments of published plans and discussions with key stakeholders are provided below.

- **National Broadband Plan**: The National Broadband Plan outlines the following goals related to broadband in the United States:
  - At least 100 million U.S. homes should have affordable access to actual download speeds of at least 100 megabits per second and actual upload speeds of at least 50 megabits per second.
  - The United States should lead the world in mobile innovation, with the fastest and most extensive wireless networks of any nation. The plan recommends making 500 megahertz of spectrum available by 2020, including 300 megahertz within the next five years, for both licensed and unlicensed use.
  - Every American should have affordable access to robust broadband service, and the means and skills to subscribe if they so choose.

  - Every community should have affordable access to at least 1 gigabit per second broadband service to anchor institutions such as schools, hospitals, and government buildings.
  - To ensure the safety of American communities, every first responder should have access to a nationwide, wireless, interoperable broadband public safety network.
  - To ensure that America leads in the clean energy economy, every American should be able to use broadband to track and manage their real-time energy consumption.
- **National Broadband Map**: The National Broadband Map shows that Gustavus receives wireless coverage from Alaska Communications Systems Holdings, Inc. at speeds of 1.5-3 mbps. It should be noted, however, that residents and businesses dispute the level of coverage. The City of Gustavus will work with Connect Alaska to correct this on the State and National Broadband Map.
- **Connect Alaska Map**: The state map shows that Gustavus is served by Mobile Wireless Broadband. The unserved layer of the Alaska map identifies that certain areas in Gustavus (presumably the most populous ones) have more than 85 households per square mile that are unserved. The current map indicates that the Gustavus School is connected to broadband through satellite technology.
- **Alaska Broadband Task Force:** The Task Force's goal is to extend the full benefits of broadband technology to every Alaskan and to ensure by 2020 that every Alaskan has 100 mbps broadband connectivity. The Task Force has published maps produced by the Regulatory Commission of Alaska that show Alaska's terrestrial middle-mile network infrastructure, including those projects that are "Proposed but Unfunded". A middle mile network proposed to serve the Gustavus area falls under this category.
- **Southeast Conference**: The Southeast Conference, under the Economic Development Work Plan and Tasks, does indicate that a goal is to "Work to improve the broadband and telecommunications infrastructure in the region." They also indicate that this is a legislative priority. They are involved in a planning process with the Tlingit & Haida Indian Tribes of Alaska.
- **The Central Council Tlingit & Haida Indian Tribes of Alaska (CCTHITA),** in partnership with the Southeast Conference, is currently undertaking a strategic planning process that will result in a Strategic Plan and implementation of affordable Broadband throughout Southeast Alaska. It is unclear the exact area that this strategic plan is covering, but any planning efforts in Southeast Alaska should be consulted. The funding for this planning process was from the USDA Rural Utility Service (RUS).
- **Provider Plans:** It is difficult to project what private telecommunications providers' long range plans are for deployment and service as it is priority information, A recent (June 5, 2012) announcement that GCI And Alaska Communications are merging their wireless operations to form The Alaska Wireless Network, LLC (AWN). AWN will design and operate an Alaska statewide wireless network to provide next generation wireless service plans for GCI and Alaska Communications wireless customers.

Community Goals and Objectives

Key Stakeholder Input

During the week of April 23rd 2012, ICF spent considerable time conducting interviews and soliciting information from those affiliated with the Community Anchor Institutions, as well as stakeholders who would like to see a robust broadband network with affordable service developed in Gustavus.

A summary of the findings of each interview follows:

- **Nate Borson, GCN and Project Manager**: Nate has years of experience trying to obtain a last mile solution for the City of Gustavus. His company, Corvid Computing, runs the Gustavus Community Network (GCN), a publicly run network that provides broadband service using WISP-grade Wi-Fi wireless technology. GCN charges by the level of use. Corvid would like an affordable and competitive service for its local customers. The services need to be sustainable and the network, services, and organization supporting them should be designed so that administration, maintenance, and operation costs are low enough that the network will be profitable or at least self-sustaining.
- **Gustavus City Council: Meeting with the Mayor, Vice-Mayor, former Councilmember Wayne Howell and the City Clerk**: In discussions with the City Council, it became clear that a robust last mile network is a high priority. Gustavus became an incorporated City in 2004 and wrote a detailed strategic plan during this process. The only milestone left to achieve in the plan is a robust broadband network. The City is currently undergoing transformation with the completion of the new $20 million dock that allows Alaska Marine Highway car ferries to come directly to Gustavus and the transition of the power plant to hydroelectric power. The community is divided on how growth should proceed but there is agreement as was indicated in the 2008 Community Survey Report that 84% of the population wants “Improved Internet Connectivity”. The community also has indicated through survey results and the community meeting that affordable access to the wider world via broadband is needed.
- **Gustavus Community Clinic (GCC)**: The Gustavus clinic is operated by Alaska Island Community Services, a Community Health Center based in Wrangell, Alaska. The clinic needs to transmit records between the clinic and the home office/other medical facilities. Clinic staff indicated that they do not have the capacity to conduct any type of telehealth services and that the transmitting of documents to their home office had to be done via mail as the bandwidth required to electronically transmit documents is not available. They are current GCN clients, using a router outside the clinic in a tree for service.
- **Gustavus Librarian, Sylvia Martinez**: The library has 5 work stations with internet access that are heavily used by the residents. Two of these are base stations where flash drives can be used and three are terminal servers that can be used for “internet surfing.” The library provides wireless internet 24/7 for those with personal laptops. The service is faster than the access the residents have in their homes. Residents also drive to the library to sit outside to access the wireless service. The librarian indicated she does not turn off the wireless router when the library closes to allow residents access when the library is closed.

  The current equipment as well as the equipment needed for faster service were provided through the BTOP funded State of Alaska Online With Libraries (OWL) project. General Communications Inc. (GCI) obtained the contract for internet service through a competitive bidding process and the OWL project covered the cost of the increased speed. E-Rate funding will continue to assist in paying for the service in the future.
- **Gustavus School** (part of the Chatham School District): While the school indicated their current technology needs were being met, when pressed about the need for distance learning opportunities and future bandwidth needs, they did indicate that their current broadband configuration might not deliver the information at the desired speeds.
- **National Park Service Concession Manager**: The National Park System runs on a separate Federal, secure network. There is little-to-no possibility of tapping into their system due to security reasons. The concessions operator, currently Aramark, does provide a system for their guests at the lodge. There is a need for a more robust system for the visitors to the National Park.
- **Gustavus Electric, Richard Levitt Company President**: The Falls Creek Hydroelectric Project is now fully operational and is providing electrical service to the residents of Gustavus. As a part of this project, a five mile long buried fiber optic communications cable was laid between the powerhouse and the existing diesel powerhouse in Gustavus. The transmission of data from the

powerhouse to the main office in Gustavus is very important and the needs to be real time, 24/7, with no congestion or latency. The company tried to use GCN's internet services and found that they were inadequate. They are now using a commercial provider to provide the feed to the main office but are experiencing periods of congestion with this solution as well.

There is a potential site for a large cell tower off the access road for the hydroelectric plant. There is an issue with who has authorization to approve the construction of a tower. The Federal Energy Regulatory Commission (FERC) has approved the construction of the tower but the State of Alaska has indicated that they believe that they have jurisdiction over the property. Any construction of a tower at this site would have to go through a lengthy approval process with multiple state and federal agencies.

There is also a future opportunity for the City of Gustavus if the National Park Service decides to use electricity from the Falls Creek Hydroelectric Plant. Lines would have to be laid between the plant and the Park, allowing the City to potentially lay fiber optic cable or another option when this happens. This service is being evaluated separately under a contract with the National Park Service and could be analyzed as a future option.

- **Gustavus Visitors Association (GVA)**: ICF has had informal discussions with members of the GVA. They have indicated that a more robust system needs to be in place for their reservations systems, tourist information, etc. to be competitive.

Additional Meetings with Stakeholders

In addition, ICF conducted additional stakeholder outreach since April. These have included:

- **Southeast Conference**: In speaking further with Shelly Wright, Executive Director, she suggested contacting the CCHITA Council to determine if Gustavus was included in their regional planning process. She said the Southeast Conference is relying on this planning process for the telecommunications planning in the area. She also suggested we contact Lori Blood from ACS. Ms. Blood is the 2nd Vice President of the Board of Directors for the Southeast Conference and chairs their telecommunications committee.
- **CCTHITA**: Gustavus is not included in the CCTHITA telecommunications process that the Council is currently undertaking as there is not a large enough native population or a native corporation in the City. Attempts have been made to connect with the Council and these are on-going.
- **National Park Service:** ICF spoke again with NPS staff on August 20, 2012 to determine their interest in extending the proposed HFC to Bartlett Cove. Staff indicated that a decision on the intertie connection between GEC and the park will be made in October. If the intertie connection proceeds, joint trenching to serve the employee housing and lodge could be possible.
- **Connect Alaska**: Nate Borson has been the primary conduit with James Dunn, Executive Director of Connect Alaska, A relationship has been developed that includes exchanges of information on state efforts and Gustavus coverage. This relationship will be beneficial to Gustavus in the long run.
- **Alaska Municipal League (AML)**: ICF spoke with Kathy Wasserman, Executive Director of AML. She suggested that the Alaska Broadband Task Force and the Southeast conference were the best organizations to talk to about state and regional telecommunications efforts.
- **Alaska Broadband Task Force:** Nate Borson attended the June Task Force Meeting in Anchorage to update the Task Force on Gustavus planning efforts to date. The Task Force indicated they would like to be updated when the final plan is completed.
- **Alaska Communications (ACS):** ICF staff spoke with Lori Blood, Account Executive and Andrew Coon, Vice President from ACS on August 7, 2012. The general conversation included:
    1. ACS has developed business cases for Gustavus in the past and been unable to make any of them work financially. ACS has no current plans to roll-out any new services to Gustavus.

2. ACS deployed an underwater fiber cable for middle mile purposes in 2008 that runs 3 – 4 miles offshore from Gustavus. There are no plans to deploy new middle mile infrastructure.
3. ACS has previously deployed and operated networks in cities when the city has helped cover capital expenditures.
4. ACS estimates that building towers to deploy LTE in Gustavus would cost $250k each.
5. ACS would be willing to talk to Gustavus about the business plan they are currently developing. Gustavus will need to be proactive in doing this as it appears that ACS has no imminent plans to change the current state of their services in Gustavus.

- **AT&T**: As a result of the Gustavus presentation at the Alaska Task Force meeting in June, Nate Borson contacted Chris Brown, Chief Operating Officer of AT&T Alaska, to discuss the state of broadband in Gustavus.

Survey and Meeting Results

ICF also distributed surveys and collected data at the public meeting held on April 25, 2012. The public meeting was attended by approximately 15 residents and business owners. The format of the meeting included a facilitated discussion about the wants and needs of the community as well as technical presentations by the ICF engineers. A healthy Q&A session followed.

Full survey results are present in Appendix A, but in general they indicate that respondents are unhappy with their current Internet service options. While nearly all respondents indicated that they currently use Internet service for general browsing and email, several indicated they would like to use the Internet for applications such as streaming video and Voice Over Internet Protocol (VOIP) but that they are currently unable to do so due to limitations of currently available services.

The survey results echo sentiments expressed during the public meeting. Residents indicated they would like to use the Internet for shopping, and applications like YouTube, Skype, and photo sharing service but that they were generally unable to do so because of latency issues and capacity restraints of current Internet connections. Both the survey results and input gathered during the public meeting indicate that there is demand in Gustavus for a widely available, terrestrial based broadband network capable of supporting the applications that are widely used in less rural, more densely populated areas.

Summary of Community Needs

The information gathering and interview session clearly identified the need for a more robust last mile network. Residents, businesses, and the tourism industry indicated that the broadband speeds and bandwidth currently available are inadequate. The goals that the community outlined for the network are:

- It must cover the entire community and be available for all residents, businesses and visitors who desire to access it.
- It must meet all last-mile communication needs for at least 15 years and if a new middle mile network is constructed, be able to access that middle mile network easily.
- It must be sustainable over the long term. The network, services, and organization supporting it should be designed so that administration, maintenance, and operation costs are low enough and the operating revenues sufficient enough that the network will be self-sustaining.
- It must be affordable and competitive for all, although the definition of affordable varies by community member.
- It should offer a range of plans/services that match each customer's needs.

- It should serve as a model that other communities can emulate.

Network Design and Deployment

This section identifies the local factors that will impact the design of the proposed network, including any issues that may impact the construction of the network. These factors include:

- Number of households, businesses, and other community demographics (all data according to 2010 Census):
  - Gustavus had 442 residents, an increase of 3% over the 2000 census. There are 212 households.
  - Sixty-nine percent of the population is between the ages of 18-64; 18% is under 18 and the remainder, approximately 13% is over 65 years of age.
  - The population is over 91% white and almost 3% native.
  - There are a total of 488 total housing units in Gustavus. Of these units, 194 (39.8%) are seasonal/vacation homes.
  - The Gustavus School provides education for grades K-12. In 2010-11 there were 42 students.
  - The Gustavus Community Clinic provides health care for the residents. It is considered an Emergency Care Center.
  - The Gustavus Community Library is available for all residents. The library has broadband available, including wireless access.
  - The City Hall has a community meeting space.
  - There are plans to build a Community Center. Fundraising is on-going for this Center.

- Internet access needs and goals of current residents, including current and desired usage patterns and devices as indicated in survey results collected by ICF:
  - 9 of 11 respondents currently use an Internet connection for general browsing, email, and online banking and shopping.
  - Of the 9, 4 receive service from GCN, 3 from a satellite provider, 1 via a mobile wireless provider, and 1 from an unknown provider.
  - 5 respondents indicated that they currently use the Internet for streaming audio, 4 respondents indicated that they would like to use the Internet for this purpose.
  - 2 respondents indicated that they currently use the Internet for streaming video, 7 respondents indicated that they would like to use the Internet for this purpose.
  - 7 respondents indicated that they would like to use the Internet for VOIP.
  - 6 respondents indicated that they would like to use the Internet for video teleconferencing.
  - 6 respondents indicated that they would like to use the Internet for telecommuting.
    When asked what the most important uses/applications were responses were mixed but tended towards applications that require more robust Internet connections (e.g. streaming video, VOIP).

- Geology, topography, and climate:
  - Gustavus lies on the north shore of Icy Passage at the mouth of the Salmon River in the St. Elias Mountains, 48 air miles west-northwest of Juneau.
  - Gustavus was formed when the Grand Pacific Glacier retreated and a spruce-hemlock forest began to develop. Gustavus is located on a flat area formed by the outwash from the glacier, and the area is still growing. It is surrounded by Glacier Bay National Park and Preserve on three sides and the waters of Icy Passage on the south. Glacier Bay National Park is 3.3 million acres and offers 16 tidewater glaciers. The community lies at approximately 58.413330° North Latitude and -135.736940° West Longitude.

  - The area encompasses 29.2 sq. miles of land and 10.0 sq. miles of water
  - The terrain in and around Gustavus town is relatively flat, with some rolling hills. As one travels further from town, the hills become larger, particularly near the coast and the area north and east of the airport.
  - There are many tall, dense, coniferous trees throughout Gustavus.
  - The area's maritime climate is characterized by cool summers and mild winters. Summer temperatures range from 52 to 63°F and winter temperatures from 26 to 39°F.
  - Gustavus is only accessible by air or sea.

- Current networks, infrastructure, providers and their plans:
  - Gustavus Community Network (GCN): GCN is the municipal Internet Service Provider owned and operated by the City of Gustavus, Alaska offering the only local dial-up Internet access and limited broadband service in the area. GCN now offers the choice of usage-based, flat-rate, and short-term plans.
  - AT&T provides wireless service via a tower located near the airport. This 1xRTT service, when congested, provides speeds equal to dial-up.
  - Alaska Communication Services (ACS) provides wireless broadband service via a cell tower near the airport. ACS recently upgraded their Gustavus wireless internet service to 3G. Those residents within range of the tower can now access download speeds of 500-800 kilobits/sec with higher speeds at times.
  - General Communications Inc. (GCI) Wireless is also available, although it leases space from AT&T. It was recently announced that will combine infrastructure to create a single statewide wireless network called the Alaska Wireless Network.
  - Verizon is planning to offer wireless service in Alaska in the incoming year. It is not known yet whether they will provide service to Gustavus.
  - Gustavus' Community Anchor Institutions (CAI), the Gustavus School and the Gustavus Library, both have dedicated T1 circuits connecting to the WANs administered by the state education and the state library system (OWL) respectively. The school uses AT&T's terrestrial microwave network and the library uses GCI's satellite network.
  - The National Park Service also has a dedicated T1 line provided through AT&T's terrestrial microwave network. This closed network can only be utilized by NPS and their employees.
  - Other closed networks may exist at the Gustavus airport, providing information to the US Department of Homeland Security, Alaska Airlines, etc.

- Other infrastructure affecting this plan such as transportation and energy:
  - New marine dock was completed in 2011, allowing the Alaska Marine Highway System (AMHS) to provide car ferry service to Gustavus.
  - The Falls Creek Hydro Electric Project was completed in 2012. This is an 800 kWh run-of-river hydroelectric facility which will provide electric power to the community of Gustavus. The project is displacing existing diesel generation.
  - The NPS administers the cruise ship traffic in Glacier Bay National Park. There is a 10 mile road connection to Bartlett Cove in Glacier Bay National Park.

- Institutions and businesses and their needs, desires, and capabilities:
  - The survey and the interviews with community members indicated there was the desire and in many cases, the bona fide need, for a more robust broadband last mile network. The Health Clinic is limited in providing telehealth services as well as document transmittal.

- The availability of personnel with expertise needed to deploy the broadband network:

  - See the Draft Technology Recommendations for specific requirements for each option, but the availability of expert personnel to administer and maintain the broadband network is an issue.

- The capacity of local institutions and businesses to connect to the broadband network:
  - The local community anchor institutions, the school and library, have more robust broadband network connections than most in the City. The library indicated they could use faster speeds and more computer stations while the school is satisfied with their level of service and technology available. All other businesses indicated they certainly prefer a more robust network provided the broadband service was reasonably priced.

- Potential delivery of services that would benefit from a robust broadband last mile network
  - Each person/entity interviewed indicated that they would benefit from a more robust last mile network. For example, Gustavus Electric needs real-time data transmission from the electrical substation to the main office; the Health Clinic needs to transmit documents to its home office; tourist-based businesses need a robust electronic reservation system and residents desire to watch and upload streaming videos.
  - Other examples of these services could generate funding for the network. These services could include distance learning/education, telehealth, smart grid, entertainment video services (such as Hulu or Netflix), Voice over Internet Protocol and simple video conferencing (for example, Skype) and local access audio and video programming.

- Future changes in population and network use:
  - Gustavus is undergoing change at a more rapid pace with the construction of the marine dock and the vehicle ferry service inaugurated in 2010. It is believed that the amount of daily tourists visiting Gustavus will increase. These visitors will need access to broadband, mostly likely wireless. The area around the marine dock is a potential area for a high-capacity wireless “hot spot”.
  - There is the potential opportunity for Gustavus Electric to provide electric services to Glacial Bay National Park. This would mean constructing new utility lines across the City, allowing the potential of fiber optic cables to be constructed.
  - When the Gustavus Community Center is built, a robust broadband network could be utilized for distance learning, life-long educational opportunities, gaming and other community related events.

Broadband Network Operation and Use

Specific information concerning the broadband network operation and usage models can be found in the Draft Technology Recommendations document submitted with this Assessment. Included in the document are:

- The options for Gustavus to consider with details on potential costs and benefits.
- Information on potential funding sources, including identified governmental entities, organizations, businesses, and individuals that may help the community deploy, operate, and maintain the network, including:
  - Federal and state government agencies
  - Telecommunications companies
  - Non-governmental organizations such as foundations or associations

After the City selects the option from the Draft Technology Recommendations, a detailed business plan for the option selected will include the uses and applications for the last mile broadband network, including any revenue that may be generated from these applications. The business plan will include potential revenue from the following services: Broadband services for residents and businesses; Telemedicine; Education/distance learning; Emergency services and communication; Government access; Utilities and any other revenue-generating applications.

The detailed business plan will identify the resources needed to operate the last-mile network. The City of Gustavus already has the operational basis for a municipally-owned network if it chooses that option.

Obstacles to Deployment or Use

While the City of Gustavus already has some of the criteria needed when developing a robust broadband last mile solution, including funding for planning, a rather flat topography, community anchor institutions that have adequate service, a hydroelectric plant that can provide fiber access to the Rink Creek area, and a knowledgeable populace, there are also obstacles, including:

- Lack of access to a cost-effective and middle mile network of ample capacity
- Regulatory issues, particularly involving the positioning of a tower on land owned the State of Alaska's Department of Natural Resources[15]
- Affordability and scalability of the broadband network
- Small and fragmented markets, including lack of zoning so that there is no clear indication what future growth/need are going to look like
- Potential lack of financing for the broadband last mile network

[15] The ownership and regulatory structure on this piece of property is complicated. This is because FERC has a reservation in the patent (only such arrangement in the country – a result of the act of Congress that removed this parcel from Glacier Bay National Park) granting it and its licensee, Gustavus Electric, an ownership interest of sorts, but DNR says Gustavus Electric still needs a lease, which is yet to be finalized even though the project is complete and operational.

Appendix A: Survey Results

Below are tabulations of all survey responses collected during ICF's visit to Gustavus in April 2012. Eleven completed surveys were returned to ICF.

Question: Which best describes the way you plan to use broadband services?			
Household/Personal Use	Business Use	Household & Business Use	No Response
5	0	5	1
Question: How many people are in your household?			
One	Two	No Response	
4	5	2	

Question: Please provide information on telecommunications and entertainments services your household or business currently consume.																		
	Internet			Local Telephone			Long Distance			Cell Phone			Satellite Television			Other		
	Provider	Months Used	Avg Monthly Cost	Provider	Months Used	Avg Monthly Cost	Provider	Months Used	Avg Monthly Cost	Provider	Months Used	Avg Monthly Cost	Provider	Months Used	Avg Monthly Cost	Provider	Months Used	Avg Monthly Cost
1	GCN	12	60	ACS	12	32	--	--	--	AT&T	12	74	--	--	--	--	--	--
2	Hughes	--	89	ACS	--	25	AT&T	--	25	AT&T	--	30/phone	--	--	--	--	--	--
3	StarBand	6	50	ACS	12	24	GCI	--	--	Net 10	12	15	DirecTV	6	70	--	--	--
4	GCN	12	70-120	ACS	12	27	--	--	--	--	--	--	--	--	--	Netflix	12	30
5	--	--	--	ACS	12	20	AT&T	12	18	--	--	--	DISH	12	75	--	--	--
6	GCN	12	200-300	ACS	12	0	--	--	--	AT&T	23	200	DirecTV	12	75	Netflix	12	17
7	--	--	--	GCN	12	25	--	--	--	--	--	--	--	--	--	--	--	--
8	AT&T (iPad)	3	25	ACS	12	28	ACS	12	28	[Illegible]	12	5	--	--	--	--	--	--
9	[Illegible]	[Illegible]	[Illegible]	[Illegible]	[Illegible]	[Illegible]	[Illegible]	[Illegible]	[Illegible]	[Illegible]	[Illegible]	[Illegible]	--	--	--	--	--	--
10	StarBand	12	25	ACS	--	--	GCI	--	--	AT&T	--	--	None	--	--	Netflix	--	--
11	GCN	12	70	ACS	12	24	all card	12	10	--	--	--	--	--	--	Netflix	12	20

Question: Please indicate which of the broadband uses or applications listed below you currently use (either at home or work) and which you would like to use.

Broadband Use/Application	Currently Use	Would Like To Use	No Response
General web browsing / email	9	2	0
Streaming audio (e.g. radio stations, Pandora)	5	3	3
Streaming video (e.g. YouTube, Netflix)	2	7	2
Secure transactions (e.g. shopping, banking)	9	1	1
Webpage design / management	1	2	8
Web hosting	0	0	11
Voice (e.g. Vonage, Skype)	0	8	3
Videoconferencing	0	6	0
Telecommuting (e.g. VPN, remote access)	0	6	0
Telehealth services	0	1	10
Utility monitoring	0	0	0
Other (please describe below)	0	0	0

	Question: Please list the top three broadband uses/applications that you would use if they were available.			**Question: Please list the maximum price you would be willing to pay for broadband service.**
	Priority 1	Priority 2	Priority 3	
1	YouTube	Skype	Videoconferencing	125-150
2	File sharing	Telecommuting	Streaming	100
3	--	--	--	60-70
4	Music	Audiobooks	Skype	Depends on service
5	--	--	--	Don't know
6	Streaming video	Skype	Music/Photo Sharing	--
7	--	--	--	40
8	Personal use	Voice Skype/Vonage	--	50
9	General use	--	--	50
10	Internet	Streaming Video	Telephone Service	--
11	Voice over IP	Streaming video	--	80

Question: Please describe current limitations on use including speed of service, service reliability, price, and any other factors that prevent you from using applications you would like to use.

- Speed of service and dropping of packets are the main issues. Dropping of packets becomes more noticeable as the file you are sending and/or receiving gets larger.
- Satellite capability/price
- We live back in the tall trees and need an internet service that can get back to residents in the trees. Fiber optics? Some applications we don't even try to use because StarBand just won't support them -- causes frustration to try to watch a video or YouTube.
- Poor phone line connection / data quality speed.
- Speed and cost of service.
- Dial-up.
- Satellite was weather dependent. Other wants are unavailable at dial-up speed at home in forest.
- Previous satellite was weather dependent. Dial up too slow to do much on internet.
- Satellite StarBand is too slow for streaming video. Keep the price low though or we'll end up using this rather than broadband. Would be great to have internet phone service as we need to have separate companies for local vs. long distance. However, it is nice to make local calls without a fee, so a high proportion of the town would need to switch to internet phone so that would not matter so much. Would be great if cell service could improve as will, then no house phone is needed.
- Speed and reliability are low. Cost is high.

Question: Please list any concerns, issues, questions, or other comments regarding last-mile broadband service.
• What can be built and maintained in the community with low subscribership? • Do not want to cut down trees. • It's easy to get service to those residents in open areas. We need internet service (dependable and high speed) which reaches all areas of the city. Also needs to be an internet service that last for 20 years. • Cost, can we afford to keep control of hidden costs. • Hope it will work around Gst. • Thanks for doing this survey and pursuing this project. • Fast, reliable, affordable Internet service and voice and entertainment are more important but less available in rural Alaska than most places.

Appendix B: Broadband Deployment Options & Recommendations

This report outlines options and recommendations the City of Gustavus should consider in developing its community broadband planning efforts. This report was produced by ICF International under contract with the City of Gustavus. ICF staff drew on their professional experience to identify and assess last-mile network technology options, business models, and construction financing options for a last mile solution for the City. The sections below provide ICF's assessment, and appendices following this report provide additional background information that ICF considered prior to making the recommendations.

Technology Recommendations

Multiple technologies were assessed to arrive at recommended alternatives for a last mile broadband network in Gustavus. This assessment, which is provided in Appendix A, took into account usage demands discussed in the Gustavus Community Assessment as well as the unique terrain and climate in Gustavus.

The terrain in and around town is relatively flat, with some rolling hills. As one travels further from town, the hills become larger, particularly near the coast and the areas north and east of the airport. Coniferous trees throughout Gustavus will make commercial cellular style circuit or packet-switched wireless service delivery challenging. This is because Gustavus' dense foliage will significantly attenuate the wireless radio signals, limiting coverage ranges. The average height of the tree coverage makes it difficult to mitigate even with relatively tall radio towers.

The maritime climate in Gustavus is characterized by cool summers and mild winters. Summer temperatures range from 52 to 63°F and winter temperatures from 26 to 39°F. This does not pose a challenge to network design considerations as performance broadband equipment is designed either for indoor ground benign environments (managed room temperature) or for outdoor ground hostile environments (temperatures ranging from -40^{0}F to +140^{0}F).

The assessment also took into account the remote nature of Gustavus, that the city is only accessible by air or sea, and the impact that its remoteness will have respecting infrastructure maintenance, equipment sparing, and customer premises equipment.

After assessing 11 approaches to deploying broadband in Gustavus, we determined that if the community wishes to deploy a wireline technology that a hybrid fiber-coaxial/Wi-Fi network is the most appropriate. If, however, the community desires a wireless solution, a Long Term Evolution network is ideal. A discussion of both the wireline and wireless recommendations follows.

Wireline Technology Recommendation

The most attractive solution for providing a network designed to deliver broadband Internet access to Gustavus is a hybrid HFC/Wi-Fi network.

Hybrid fiber-coaxial (HFC) is a telecommunications industry term for a broadband network which combines optical fiber and coaxial cable. Cable television operators the world over have been deploying these networks since the early 1990s. HFC networks represent one of the preeminent platforms for delivering high speed Internet access.

The primary HFC architecture is capable of delivering broadband speeds over 1.5 Gbps downstream and 150 Mbps upstream to the end user as well as video and telephony services. Video and

telephony services are mentioned because the network is capable of delivering these services. There are differences in the cost to deploy and maintain the network, the expertise needed to manage the network and potential capacity. HFC is among the lowest cost per bit ratios of any wireline network architecture available today.

DESCRIPTION OF HYBRID FIBER COAX NETWORK ARCHITECTURE (HFC)

The HFC network has two principle components. The first is the optical network which uses fiber optic cable to transport signals to each service area. The second is the coaxial network which uses coaxial cable for distribution to make the connection to each service address.

The fiber optic network extends from the master headend (the central office, data center, etc.) and out to fiber optic nodes which are placed in each neighborhood. Each fiber optic node would typically serve anywhere from 20 to 100 or so service addresses. The master headend would be centrally located and will have IP aggregation routers for interconnection to the Internet middle mile circuit(s).

From within the headend, IP traffic is encoded, converted to RF signals transmitted using the world-wide cable modem standard called DOCSIS. These signals are easily combined with other RF signals such as digital and analog television signals, FM radio broadcasts and transmitted through the fiber network using optical transmitters and receivers. The fiber optic cables connect the headend to fiber optic nodes using a point-to-point or star topology.

The optical portion of the network provides a large amount of flexibility. If sufficient fibers exist in the existing fiber network, they can be leveraged to reduce construction costs. Additional fibers can be included in the construction to provide a direct fiber connection to specific locations or for future use. Fiber optic multiplexors may also be utilized to transport several signals on an individual fiber.

FINAL CONNECTION TO CUSTOMER PREMISES

The coaxial portion of the network connects the fiber network to the service addresses in a tree-and-branch configuration. The fiber node serves to transition between the fiber and coaxial plant. The coaxial cable includes taps to allow connections for individual service addresses. RF amplifiers may be used at intervals to overcome cable attenuation and passive losses of the electrical signals caused by splitting or "tapping" the coaxial cable. The coaxial portion of the network may be extended and modified to accommodate new service addresses.

Each fiber optic node and all equipment on the coaxial distribution is provided with electrical current from a power supply. This power supply connects to the electric utility and makes the appropriate voltage conversion. The power supply may also include standby batteries to provide power in the case of utility service disruption.

At each service address, a “drop”, consisting of flexible coaxial cable, is connected to each service address. This drop is routed into the service address and connects to a DOCSIS modem, which provides an Ethernet, USB or Wi-Fi connection to the customer equipment.

HFC DEPLOYMENT COSTS ASSESSMENT

The costs to deploy the HFC network are categorized according to where the various assets will be located. Specifically, they are grouped as being housed in the headend, comprising the outside plant or defining the customer’s drop. Each grouping identifies costs that are related to materials and those related to labor. The following table presents the identified capital costs in a normalized fashion based on investment cost per mile of outside plant.

Rough Estimate of HFC Deployment Costs	
Outside Plant (OSP) Deployment	
Materials	$12,273.93
Labor	$16,408.61
Total OSP deployment Cost per Mile	$28,682.54
Headend Equipment Deployment	
Materials	$ 736.51
Labor	$ 83.50
Total Headend Equipment Deployment Cost per Mile of OSP	$ 820.02
Drop (Material & Labor) per Customer Cost	$ 125.00

ADDITIONAL CONSIDERATIONS

Comparing long-term costs, HFC networks are much less expensive to deploy and maintain over the first 12 years or so when compared to passive optical network architectures. This owes mainly to the timing of expenditures. While modern "fiber deep" HFC networks are generally as reliable as a passive optical network, they do require that active electronics remain powered via the coaxial cable itself. These expenses can add up over time, and the general breakeven point would be 12 years out. However, there are some local factors in Gustavus that most likely push the breakeven point out beyond 12 years.

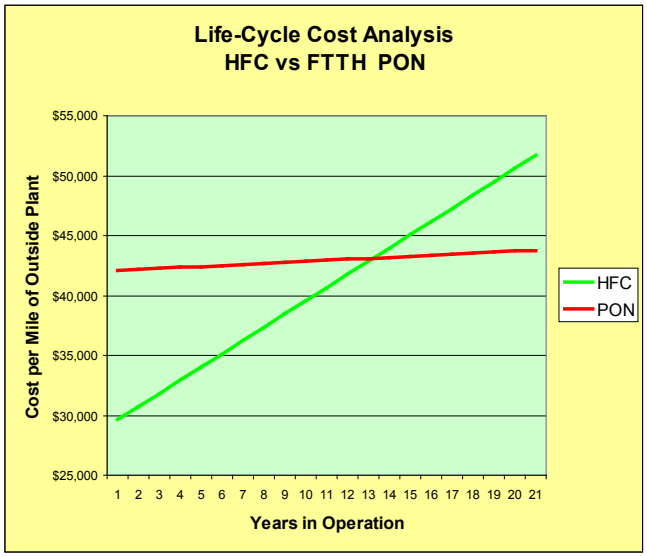

One such issue regards expanding the outside plant network to reach newly constructed premises. Outside plant fiber is generally laid out to reach all known places it might be needed and any that are planned. When it is less well known where a new building or tower might be built, it is quite likely that new fiber will need to be constructed. This often means undertaking expensive plant extensions as the network ages. This is even more expensive if fiber plant is underground rather than aerial, as would be the case in Gustavus. Efforts to mitigate later costs by deploying more in-ground conduit will increase initial deployment costs significantly since extra conduit needs to be laid everywhere when specific locations for that growth cannot be accurately predicted, it is impossible to account for growth in any fiber network.

Another issue regards the metric called MTTR, or mean time to repair. Fiber optic cables and splicing equipment and supplies can be costly to inventory. Also, optical splicing is still reasonably craft sensitive and the equipment itself can be fairly expensive. Coaxial cable is far less expensive to inventory, requires no special equipment to splice, and requires only basic mechanical skill. The causes of failure to coaxial cable are the same as for fiber: mechanical damage related to digging or to water damage over time. The former is almost always caused by the property owner, whereas the latter is usually avoided using good construction practices.

There are other operations metrics, such as mean time to [first] failure (MTTF) and mean time between failures (MTBF). These are more subjective at this stage of planning because many

failures are caused by factors not in the operator's control. To cope with this, MTTF and MTBF usually count only those elements that are within the operator's control, which excludes subscriber drop cabling (the cables that connect the easement plant to the premises) and customer premises equipment (CPE).

Implementing a Wi-Fi Overlay on the HFC Network

A Wi-Fi network can be overlaid on the HFC network to provide additional community coverage. Overlay in this sense refers to distributing weather-hardened, HFC-specific Wi-Fi routers along the HFC routes. These are connected directly to the HFC network itself and get AC-powered by the network. This approach ensures that Wi-Fi routers are always reasonably close to subscribers either at home or on the move. Such a Wi-Fi network could be deployed selectively, in public areas, residential areas, business areas, or in combination.

Extending the Network

There is no reliable way to accurately foresee or plan for specific growth in the initial network design for Gustavus. Plant extension costs will vary greatly depending on premises proximity to existing plant. Typically, HFC architecture will be less expensive due to the capital expenditure differences if only coaxial cable is needed to extend the distribution network.

The "backbone" fiber routing should be carefully considered, which for Gustavus means primarily following all the main road easements.

A "joint trench" agreement that includes all parties engaged in outside plant and road construction can lower expansion costs dramatically. Utility power cabling, telecommunications cabling, road construction, and so on, are usually driven by the same needs and timing and each party can realize significant savings if such construction is well coordinated.

Maintenance Considerations

The cost of developing the skills necessary to maintain the network is best considered as part of the technology selection process. Job descriptions and salary evaluations should be researched before selecting any specific solution.

Tools and test equipment needs for various network technologies should be evaluated and costs estimated to assess on-going maintenance costs.

Wireless-Only Technology Recommendation

If Gustavus prefers a wireless-only solution over a wireline or hybrid network, deploying a network using Long Term Evolution (LTE) technology will best serve the broadband needs of the community now and is least likely to become technologically obsolete over the next decade. An LTE network would provide broadband both fixed wireless service and mobile wireless service.

LTE DEPLOYMENT SCENARIO

LTE is the most recent technical standard for mobile wireless telecommunications networks. It enables a faster and more efficient packet data transfer than previous mobile wireless technologies. LTE is interoperable with previous generations of mobile wireless technologies such as GSM, UMTS, and CDMA-2000.

The main components of an LTE network are:

- Cell sites that deliver the broadband service wirelessly to users. An LTE cell site is known as an eNodeB.

- A core network responsible for many of the administrative and control functions of an LTE network. These include
  - serving Gateway which processes the user data;
  - Mobility Management Entity which manages the data sessions and the location information of the users;
  - Packet Gateway which controls access to external networks including the internet and manages the IP addresses; and
  - Policy and Charging Rules Function (PCRF) which is used to calculate the tariffs associated with each connection.
- A Fiber Optic or Microwave backhaul network to connect the cell sites to the core network.

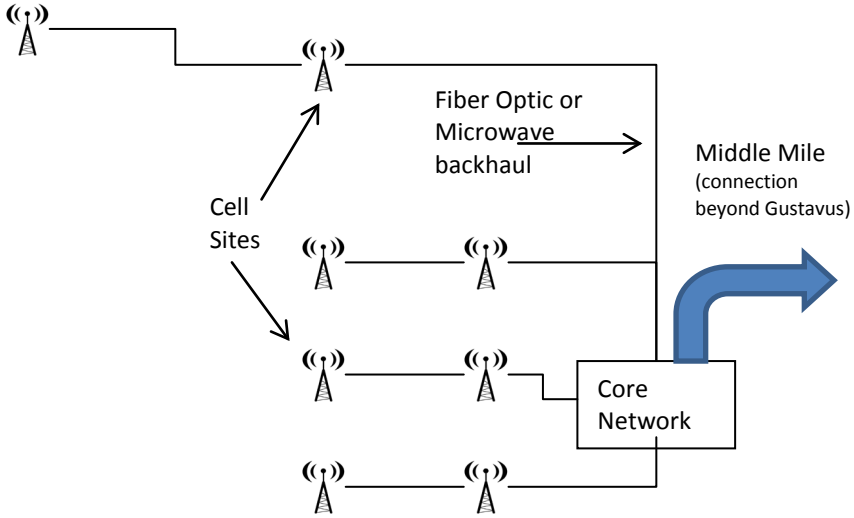

Each Gustavus-based cell site can be expected to have a range of approximately one mile. To provide the coverage described, approximately eight tower sites would be required: Six towers providing service in and around Gustavus, and two additional towers to provide service along the roadways to Glacier Bay National Park.

The coverage range of the cell sites will be constrained by the abundant coniferous trees which work to absorb radio signal energy. Unfortunately, then, a broadband wireless deployment of any kind will require more cell sites than the "average area" to assure complete and reliable coverage. Limited middle mile network capacity will act as a constraint on communications throughput for all traffic reaching Gustavus. These kinds of issues are generally misinterpreted by end users as a local network slowdown. The best way to mitigate this problem of low middle mile bandwidth is by ensuring that all network routing for the network is done in Gustavus and not elsewhere. This will allow other approaches such as content caches to further reduce middle mile demand.

ADDITIONAL CONSIDERATIONS

Spectrum License and Operating Frequency Band

In order to operate an LTE network, one must be licensed by the Federal Communications Commission (FCC). A license can be obtained directly from the FCC or leased from an existing license holder. Costs are often very high and vary greatly according to the specific service area.

The frequency band of operation is an important consideration in Gustavus due to the heavy tree cover that attenuates the radio signals. Generally speaking, lower frequency bands are more desirable since they are able to better penetrate obstacles such as trees, vegetation and building materials. For LTE in Gustavus, the 700 MHz frequency band is the most attractive choice followed

by other bands below 2000 MHz. Bands above this will likely drive site count up beyond what is practical, especially given the type and number of trees.

Interoperability and Roaming

In order for visitors to connect to a Gustavus LTE network, their devices must be LTE-compatible and there must be a roaming agreement between the Gustavus network operator and the visitor's own service provider. Such is true for any subscriber to Gustavus' network when they are outside the Gustavus network coverage area.

Roaming agreements are necessary to not only permit users to use the other network's resources, but also to support administrative functions such as billing and service provisioning.

Backhaul

Connecting the LTE cell sites to the rest of the network requires a "backhaul" connection. The backhaul network transports localized cell site traffic back to a central aggregation point. From here the traffic is routed back to local network of cell site, or onto a middle mile network for connections beyond Gustavus. There are two possible methods for backhauling, either point-to-point microwave radio or wireline connections via optical fiber, coaxial cable, or copper-pair cable.

Middle Mile Connection

A Gustavus LTE network will need connectivity to the internet and areas beyond Gustavus via a middle mile network connection. Without a middle mile connection, the Gustavus network would be substantially closed, meaning that information could be freely sent within Gustavus, but nowhere else.

It is possible for more than one middle mile connection. While this can provide needed capacity and help manage costs, it does add local complexity in that outbound traffic must be deliberately routed among these networks. The cost, capacity and latency of the middle mile connection strategy is a consideration for any broadband network plan.

LTE and Obsolescence

Selecting LTE as the mobile wireless network platform should provide some protection from technological obsolescence over the next decade. Mobile wireless standards continue to evolve quickly, and not always in ways that provide simple or inexpensive backward compatibility. The next-generation standard to follow LTE, called LTE Advanced, is already well along, but promises compatibility with current generation LTE. The wireless broadband industry has effectively converged on the LTE technology standards as the de-facto technology of choice, but it is noteworthy that it has done so at the expense of the competing WiMAX standard.

Deployment Method Consideration

LTE-implements premises-based fixed broadband wireless service using a modem and an antenna mounted on a building (usually at roof height). Inside the premises signal is distributed most often via wired Ethernet or Wi-Fi. This improves radio performance and can move reliability and throughput very close to ideal. Note, however, that this option adds equipment costs, increases replacement equipment inventory, and increases repair and maintenance tasks for the network operator.

Expanding the LTE Network

Should the need arise to expand the Gustavus network coverage footprint, new cell sites must be planned and added. This will also require improvements to the backhaul network either by adding microwave links or wireline connections. Middle mile capacity will also need improving if the new service area will increase the number of concurrent users.

Costs

A first-order approximation is around 8 sites divided into 24 sectors for a full-coverage LTE network in Gustavus. Based on similar LTE deployments elsewhere in Alaska, a rough-order-of-magnitude estimate for this would most likely be between $2M and $3M.

Business Model Recommendations

There are a number of business models that can be used to deploy and operate broadband networks. Many of these models are built on profit maximization. Given the remote nature and small population of Gustavus, it will be challenging for the City or any other provider to derive any profit from the network. This is illustrated in a pro forma analysis that captures general, simplified assumptions about a possible network.

The model used to conduct this analysis, provided in Appendix B, is built upon an assumed number of broadband subscribers, their average monthly usage (as measured in gigabytes), and the cost they pay to receive broadband service. Subscriber usage serves as the primary driver of costs due to the middle mile service required to meet usage demands. Subscriber payments serve as the sole source of revenue. After comparing costs to revenues, the model demonstrates that in order for the network to stay financially viable, middle mile costs must remain more-or-less constant, assuming that subscription price is to remain affordable and somewhat constant. If middle mile costs increase, the network will operate in the red unless subscription prices rise at the same pace as middle mile costs.

To manage middle mile costs while allowing for an increase in the number of subscribers, various mitigating strategies can be employed so that capacity can increase by means other than buying more terrestrial microwave based T1s (the current and assumed future source of GCN's middle mile service). Some of these methods are: content caching, which addresses short-term congestion that would be the inevitable result of failing to add middle mile capacity; site mirroring, which; relieves congestion by addressing repetitive bulk downloads such as software and operating system updates; and policy routing, by which alternative middle mile technologies with lower costs-per-bit can be used to serve latency-insensitive data. Employing these techniques will add to network operating costs, but their costs will be much lower than adding middle mile capacity via additional T1s.

In addition to managing middle mile costs, the network's financial picture would also improve via additional revenues. Such revenues might be found if the City could lobby both the library and the National Park Service and its lodging vendor to utilize the network. This institutional usage coupled with management of middle mile costs may provide for profit potential, particularly if the network was to receive Connect America Fund (CAF) dollars (see Construction Financing Recommendations for an explanation of CAF). However the lack of a more certain profit potential makes it unlikely that any business model will work to deploy the network other than the community network model that is currently being employed by the City through GCN.

That it is unlikely that network operations will be profitable also limits business models that may be used to provide services. The most promising scenario is likely that GCN continues to use its current model whereby it engages a contractor to operate the network. Alternatively, interested parties in the community could form a cooperative to provide service. Cooperatives are businesses that focus on providing services to their members over generating profits. Due to the limited profit potential of the network, a mission-driven organization such as a co-op may be well suited. The City may also consider engaging an outside telecommunications firm to provide service. Such a firm would pay the City a fee for using its network provided the firm saw potential to earn a return on the services it would provide.

Construction Financing Recommendations

ICF considered ten potential sources of construction funding, including those listed below:

- Alaska Municipal Bond Bank Authority Loans;
- Rural Alaska Broadband Internet Access Grant Program;
- The Connect America Fund;
- Broadband Loan and Loan Guarantee Program;
- Community Connect Grants;
- Telecommunications Loan Program;
- Business & Industry Loan Guarantee Program;
- Public Works Grant Program;
- FirstNet Program; and
- Alaska Grants to Municipalities Program ("CIP").

Each funding source is described and assessed in detail in Appendix C. As discussed above under Business Model Recommendations, a simple pro forma analysis of the possible network does not demonstrate a positive cash flow making it impossible to service a loan secured through a loan program. Because the city has what is considered broadband available through GCN's mesh network and ACS's 3G services, Gustavus does not qualify for many of the grant programs. Because Gustavus will not be able to find free backhaul services that allow the network to generate sufficient cash to pay down a loan, there seem to be four options available to Gustavus:

1. Apply for a Grant to Municipalities (CIP) from the Alaska Legislature.
2. Apply for an Alaska Municipal Bond Bank Authority Loan that can be repaid with municipal funds.
3. Work with other jurisdictions in southeastern Alaska to develop a regional broadband plan and apply for a Public Works Grant from the Economic Development Administration.
4. Aggressively monitor developments with the Connect America Fund and prepare to participate in a reverse auction that will subsidize network deployment and operations.
5. Seek foundation or other private support for network construction and operations.

Alaska Grants to Municipalities (AS 37.05.315, "CIP")

This Gustavus broadband planning project was funded by a CIP grant awarded in July, 2011. The legislature has broad discretion to make grants under this program and often makes awards based on the priorities identified by local communities. The CIP program appears to be the best source for funding design and construction of the Gustavus broadband network, especially if the city of Gustavus identifies broadband as its highest priority.

Alaska Municipal Bond Bank Authority Loan

The construction of community networks around the country has been financed through bond issues. For Gustavus to access this funding, the City would need to apply for funding raised via bonds issued by the Alaska Municipal Bond Bank Authority (AMBBA). AMBBA makes funding available to any local government in need of funding for a capital project. Funding is provided in the form of loans with rates dependent on prevailing rates in the national tax-exempt bond market.

Frequently when municipal bonds are used to finance the construction of a broadband network,

revenues generated by the network are used to retire the debt. As the pro forma demonstrated, it seems unlikely that the network will be able to generate sufficient revenue to repay construction loans. As a result, the City would have to find or generate local revenues in order to service a loan from AMBBA.

Economic Development Administration Public Works Grant

The Economic Development Administration's (EDA) Public Works program is a federally administered program that provides matching grants to support the construction or rehabilitation of essential public infrastructure and related facilities. Projects funded through this program include investments in facilities such as water and sewer systems, industrial access roads, industrial and business parks, port facilities, rail spurs, skill-training facilities, business incubator facilities, brownfield redevelopment, eco-industrial facilities, and telecommunications and broadband infrastructure improvements necessary for business creation, retention and expansion.

Funding is available in the form of grants of up to 50% of project costs. Projects may receive up to an additional 30 percent, based on the relative needs of the region, as determined by EDA. Additionally, if an Indian Tribe, state or political subdivision of a state has exhausted its effective taxing and borrowing capacity or non-profit organization that has exhausted its effective borrowing capacity, the EDA may grant up to 100 percent of the total project cost.

To be eligible for funding a project must be located in a region that meets at least one of the following economic distress criteria:

- An unemployment rate that is, for the most recent 24-month period for which data are available, at least one percentage point greater than the national average unemployment rate;
- Per capita income that is, for the most recent period for which data are available, 80 percent or less of the national average per capital income;
- Special need circumstances including the closure or restructuring of industrial firms or loss of a major employer essential to the regional economy; substantial out-migration or population loss; underemployment; military base closures or realignments; natural or other major disasters; extraordinary depletion of natural resources; communities undergoing changes to their economic base as a result of shifting trade patterns; or other special needs or extraordinary circumstances as determined by EDA.

Projects must be consistent with the region's Comprehensive Economic Development Strategy (CEDS). The Southeast Conference, the regional planning entity for southeast Alaska, prepares the CEDS that Gustavus would qualify under. The EDA seems to place an emphasis on regional projects when making awards under this program, so the more comprehensive the broadband network is for the region, the more likely an award seems. Working with other nearby jurisdictions to submit an application would also permit Gustavus and its neighbors to consider a middle mile solution in addition to last mile networks.

Connect America Fund

The Connect America Fund (CAF) is the outgrowth of the Federal Communication Commission's (FCC) efforts to modernize the Universal Service Fund's (USF) High Cost Fund. The High Cost Fund was established to ensure that consumers in rural markets receive the benefits of telecommunications at rates comparable to those in urban markets. With the introduction of CAF, the FCC is attempting to support broadband deployment in ""unserved"" and "under-served" areas. Components of CAF will support fixed wireline broadband, wireless broadband, and possibly satellite infrastructure. The FCC has set minimum national standards of 4:1 Mbps for fixed wireline and 3G/4G for wireless broadband. Support under CAF will transition to a fully competitive reverse-

auction format by 2018. The FCC noted that CAF will not support areas with unsubsidized competition or areas where companies made previous commitments to deploy 4:1 broadband.

To jumpstart this approach, CAF Phase 1 will provide $300 million to price cap providers to build-out unserved areas. This may provide an opportunity for Gustavus, since ACS is a price cap provider and may be offered money to increase coverage and speeds within the city. At this time, the FCC has not released the areas in which funding is being offered and providers have until the end of July to state where they wish to accept support.

CAF Phase 2 calls for a geography and technology neutral approach for competitive reverse-auctions that would cost-effectively provide a pre-established minimum level of broadband to a set geographic area. The migration to CAF will result in a shift of approximately $4.5 billion to the Fund over the period of 2012 to 2017. The FCC believes this will allow for build out and support of nationwide broadband in the most cost efficient manner. Should Gustavus chose to pursue CAF funds, immediate next steps include monitoring CAF developments to determine potential area and applicant eligibility and steps for meeting eligibility criteria after they become clear.

Foundation Funding

Gustavus may be able to secure funding from a private foundation. While such funding may not be able to cover the entire cost of network construction, it may be able to aid in generating matching funds needed to secure a Federal grant. For example, the Rasmuson Foundation makes grants of up to $25,000 for capital projects in Alaska. More funding can be made available for projects that “demonstrable strategic importance or innovative nature.” There are likely other foundations to which Gustavus could apply to fill funding gaps as part of a construction funding strategy.

Appendix A: Technology Options

Optical Fiber Networking

Optical fiber networks leverage the wide bandwidth capabilities of light waves to carry large amounts of data over long distances. Network architectures for optical fiber networks vary greatly. Some use high fiber counts to distribute individual fibers or pairs of fibers to each service location. Others employ low-count fiber sheaths which are then split multiple times to deliver single fiber connections to each service location. In a typical distribution system, active electronics are located only at origination and termination facilities and are not typically distributed throughout the outside plant. These are thus called passive distribution systems. Provided they are well constructed, they are very low maintenance and the optical portions are generally free from outside RF interference.

Gigabit Passive Optical Network (GPON)

Description	GPONs are based on a passive distribution architecture, where single optical fibers are used to provide service to several customer locations. Electronics include an Optical Network Unit (ONU) or Optical Network Terminal (ONT) at the terminal location (customer premises) and an Optical Line Terminal (OLT) at the central office or hub location. Core network data speeds are asymmetrical, and typically range from 1.25 to 2.5 Gbps in the downstream direction and 155 to 622 Mbps in the upstream direction. Individual customer speeds are usually limited to substantially less, commonly 100 Mbps.
Advantages	GPON architectures are nearly always passive distribution networks. This ensures that all active equipment is located indoors at the central office (or data center, head end, etc.) or outdoors at the customer premises. Maintenance is made much simpler and the network is highly reliable. GPON architectures utilize lower fiber count sheaths to provide service to a given number of customers than does an EPON network (see below). A second advantage is the enormous overall capacity of the network itself. At 2.5 Gbps downstream and 622 Mbps upstream, such a network could carry 1.125 TBytes per hour and 280 GBytes per hour respectively. Such a network would be free of any realistic congestion based on any foreseeable subscriber growth or and realistic bandwidth usage models.
Disadvantages	A GPON network has high initial deployment cost. New fiber is constructed at 36-to48 inch depths and cables are placed in conduit, and splice points need to be added along the fiber routes. Constructing fiber drops to customer premises can be costly, especially in Gustavus where houses may be located far from the public easement, and the CPE ONT's can represent a significant upfront investment. Corrective maintenance can be an issue since fusion fiber splicing is generally required. Fusion fiber splicing requires a controlled environment, splicing equipment, and specific skills. If the city's growth is not carefully planned, it can be difficult and expensive to expand the fiber network to meet unexpected growth. Because of the reliance on shared fiber, GPONs are challenging to reconfigure once they are installed and the fibers have been configured and spliced to serve specific locations.
Construction Costs	Underground conduits need to be placed to provide a pathway for GPON

fiber wherever in-ground construction is preferable or necessary. In places where aerial construction is preferred, poles and steel messenger strand will need to be placed to support the fiber cable. Fusion splicing is required for each distribution splitter, for joining fiber sheaths, and for maintenance. Fiber cable drops to each customer premises must be pre-determined in order to place appropriate taps in the main fiber segments.

Ethernet Passive Optical Network (EPON)

Description	An EPON is a passive distribution optical fiber network architecture that is very similar to a GPON network. A key difference is that an EPON network relies on dedicated fibers, single or paired, running directly from the central office or hub location to the terminal (premises) location. Electronics include an Optical Network Unit (ONU) at the terminal location (customer premises) and an Optical Line Terminal (OLT) at the central office or hub location. Data speeds are typically 1.25 to 2.5 Gbps in both the downstream and upstream direction (symmetrical). Per-customer speeds are usually provisioned to substantially less.
Advantages	EPON architectures are nearly always passive distribution networks. This ensures that all active equipment is located indoors at the central office (or data center, head end, etc.) or outdoors at the customer premises. Maintenance is made much simpler and the network is highly reliable.
Disadvantages	An EPON network has high initial deployment cost. More fiber is used relative to a GPON network. New fiber is constructed at 36-to-48 inch depths and cables are placed in conduit, and splice points need to be added along the fiber routes. Constructing fiber drops to customer premises can be costly, and the CPE ONT's can represent a significant upfront investment. Corrective maintenance can be an issue since fusion fiber splicing is generally required. Fusion fiber splicing requires a controlled environment, splicing equipment, and specific skills. If the city's growth is not managed with a deliberate long-range planning process, EPONs will prove expensive or even cost-prohibitive to expand to new service locations.
Construction Costs	Underground conduits need to be placed to provide a pathway for EPON fiber wherever in-ground construction preferable or necessary. In places where aerial construction is preferred, poles and messenger strand will need to be placed to support the fiber cable. Fusion splicing is required for each distribution splitter, for joining fiber sheaths, and for maintenance. Fiber cable drops to each customer premises must be pre-determined in order to place appropriate taps in the main fiber segments.

RF Over Glass (RFoG)

Description	RFoG distribution architecture is similar to the other passive optical, but the fiber is used to carry modulated RF signals, rather than baseband data. These RF signals often include video signals (analog and digital formats), voice signals (analog and digital formats), and packet data signals. In addition to the fiber transport equipment, modem systems for video, voice and data are also needed. Data speeds range from 38 Mbps to 1.5 Gbps downstream and 10 Mbps to 150 Mbps upstream (asymmetrical). Overall bandwidth capacity is roughly comparable to GPON networks, but the per-subscriber speeds and capacities are limited by the RF modem systems.

	These are generally far above provisioned customer speeds.
Advantages	RFoG technology leverages large installed base of cable modems and cable set-top boxes. RFoG can easily leverage inexpensive commodity DOCSIS 2.0 technology and be upgraded to a DOCSIS 3.0 system if higher capacity on a per-provisioned subscriber basis is required. Reconfiguration within the service address is relatively easy, as it employs coaxial cable distribution.
Disadvantages	While not difficult to manage for a seasoned network engineer, additional equipment and expertise is required to operate the DOCSIS equipment. Fusion fiber splicing is required for maintenance on outside plant. It is challenging to reconfigure an RFoG system's fibers once they are dedicated to specific locations and spliced. The RFoG architecture has asymmetrical bandwidth, meaning that more bandwidth flows to a subscriber than flows from a subscriber.
Construction Costs	Underground conduits need to be placed to provide a pathway for RFOG fiber wherever in-ground construction is preferable or necessary. In places where aerial construction is preferred, poles and messenger strand will need to be placed to support the fiber cable. Fusion splicing is required for each distribution splitter, for joining fiber sheaths, and for maintenance. Fiber cable drops to each customer premises must be pre-determined in order to place appropriate taps in the main fiber segments.

COPPER PAIR BASED NETWORKING

ADSL/VDSL

Description	Digital Subscriber Line (DSL) systems leverage existing copper pair telephone distribution networks to carry digital data signals. The signals are formatted much differently than the traditional phone communications so the network can provide both broadband data service and traditional voice telephony service on a single copper wire pair. Maximum performance is determined by the copper wire gauge, length of the wire connecting back to the DSL aggregation equipment, and a few other technical factors such as crosstalk between pairs in trunk and distribution cables. Data speeds decrease with increasing distance from the central office or hub location to the service address, but generally speeds range from 1.5 Mbps to 52 Mbps downstream and 0.5 Mbps to 20 Mbps upstream. Bandwidth is asymmetric.
Advantages	All types of DSL can leverage an installed base of copper wire. Termination equipment can be obtained at a relatively low cost. Performance can be very good if the copper plant is in reasonably good condition and the loop lengths are relatively short, which is to say less than 5,000 linear feet.
Disadvantages	DSL has a relatively short range, limiting its usefulness in rural areas such as Gustavus. Speed and reliability are highly dependent on the quality and gauge of each copper pair. DSL functionality requires that copper plants be more meticulously maintained than otherwise is necessary for traditional voice telephone service. Per-subscriber speed and capacity can be highly

variable, which can complicate pricing and perceived quality and performance.

Construction Costs The primary advantage in using DSL technology is that existing "plant" (the network comprised of buried copper cable) may be used—thus reducing construction costs. However, any existing copper plant may require extensive upgrading or corrective maintenance before it can deliver the full promise of using DSL. A few examples would be poor cable shielding, use of bridged taps, corroded connections, poor line impedance, and very light gauge copper.

Ethernet Over Copper (EoC)

Description EoC uses multiple pairs of copper telephone wiring to transport data, much like a direct Ethernet connection within a building. The use of multiple pairs allows for relatively high speeds (25 to 100Mbps) transmission over extended distances, up to 10 kilometers.

Advantages EoC leverages installed base of copper wire and has relatively low-cost termination equipment.

Disadvantages EoC uses groups of copper pairs to make each connection. EoC is not an option in areas where the number of copper pairs for a given service area are limited or insufficient. EoC's data rates decrease rapidly with distance between the central office or hub location and the service address. Additionally, speed and reliability are highly dependent on the quality of the copper pair. EoC requires a more meticulously maintained copper network than a voice-only copper network, or even a DSL network. Per-subscriber speed and capacity can be highly variable, which can complicate pricing and perceived quality and performance.

Construction Costs The primary advantage in using EoC technology is that existing plant may be used—thus reducing construction costs. As with DSL, EoC deployments may require substantial plant maintenance and improvements before it is suitable.

Hybrid Fiber Coaxial (HFC) Networking

Description HFC uses a combination of fiber optic cables for main transport and coaxial cables for neighborhood and premises distribution cabling. HFC uses a Fiber Node to transition from the optical fiber to the coaxial cable network. This is the network technology used by cable companies around the world. HFC provides all the same services as any of the PON technologies, and with comparable speeds and capacities.

Advantages HFC leverages proven and mature technology and offers compelling economies of scale. HFC technology is relatively easy to maintain, extend, and reconfigure, especially when new premises locations are difficult to predict such as it is in Gustavus. Coaxial cables are inexpensive, widely available, and do not require special skills to work with. Distribution cables are solid aluminum outer conductor (not braided), a solid wire inner conductor, have a high-density polyethylene jacket, and are very durable and reliable. HFC is essentially an RFoG passive optical network that uses inexpensive coaxial cable to reach subscriber premises. In HFC networks, the field electronics (fiber node and amplifiers) are usually independently

powered, but the network can be equipped with standby powering in the event of local utility power outages to provide continuous service.

Disadvantages HFC includes some active equipment in the distribution plant, and as such is not a passive network. This active equipment requires electrical power which is distributed directly via the coaxial cable itself. It is a safe low voltage and does not require an electrician's license. The system is also intrinsically safe from indefinitely lasting short circuits. HFC's distributed power system can be seen as a disadvantage, because the associated power supplies do require occasional maintenance if they serve as uninterruptable standby power systems.

Construction Costs Underground conduits need to be placed to provide a pathway for underground HFC fiber, and usually the underground coaxial cables in public easements. Subscriber premises drop cables are often direct buried between 8 and 12 inches. In places where aerial construction is preferred, poles and messenger strand will need to be placed to support the fiber and coaxial cables. Fusion splicing is required for joining fiber sheaths, and for maintenance, although significantly less splicing is required than GPON, EPON or RFoG networks. The HFC architecture's coaxial cables are simpler to maintain and reconfigure.

WIRELESS INFRASTRUCTURE

Broadband services delivered via wireless communications networks are able to take advantage of radio waves' ability to travel over large distances and variable terrain. The wireless service is transmitted from antennas mounted on towers, rooftops, or other poles to subscribers. There are a wide variety of technologies available, but the three modern choices for high-speed broadband services include LTE, WiMAX, and Wi-Fi.

One of the most important considerations when building a wireless network is to ensure that the wireless signal is able to travel between the transmitters and receivers without significant power loss. In Gustavus, the abundant number and wide disbursement of coniferous trees presents a significant challenge to providing wireless service. The trees greatly attenuate the wireless signals as they pass through the canopy. This limits the maximum coverage area of any cell site—meaning that more cell sites must be used to service a given area. More cell sites lead to a higher deployment cost.

Some wireless network frequency bands of operation work better than others. Generally speaking, lower frequencies will fare better against a given obstacle better than higher frequencies. If wireless is to be deployed in Gustavus, lower frequencies are generally preferred.

Long Term Evolution Wireless (LTE)

Description Long Term Evolution (LTE) is the name for the latest wireless communications technology standard. It is expected to be the dominant worldwide mobile wireless technology once fully deployed. It is referred to as a fourth-generation ("4G") wireless technology, where each technology "generation" generally increases data transfer rates and features. Most commercial mobile wireless network operators have committed to using the LTE technology standard and others are expected to follow. Previously, each of the competing (and incompatible) wireless technology standards had its own sizable market share and regional significance.

LTE is based completely on a packet-switched (data) network, as opposed to the hybrid networks that exist today. The older hybrid approaches have separate provisions for circuit switched (voice) traffic and data traffic. Importantly, LTE has been optimized to provide high speed data transfer rates in environments most difficult for mobile radio service—where the mobile device is moving at high velocity, for use in dense urban areas, or both.

LTE can provide speeds up to 100 Mbps.

Advantages

Global adoption of LTE is expected to lead to broad interoperability with operators of other networks. The cost per unit of infrastructure is anticipated to fall as LTE adoption increases.

There are a considerable number of deployment options for LTE, including choice of frequency bands in which to operate. There are more than 30 different possibilities as specified by LTE's standards-setting body, 3rd Generation Partnership Project (3GPP). The network operator can choose varying radio spectrum channel bandwidths, such as 1.4, 3, 5, 10, 15, and 20 MHz. This offers flexibly in terms spectrum licensing and the management of the spectrum once operating the networks

LTE can be deployed as a time-division duplex scheme or as a frequency division duplex scheme. These methods separate the communications between the uplink (subscriber to tower) and downlink (tower to subscriber) communications giving flexibility in choosing infrastructure.

LTE adapts data rates to each user based on the quality of the user's radio signal. This technique is called adaptive modulation and coding (AMC). The effect of AMC is that users who receive a strong LTE signal will get highest speed and throughput service, whereas any user with a weak LTE signal will still get service, but at a lower throughput rate.

LTE's network architecture has been simplified and modularized, making deployments more straightforward and improve network performance (speed increases and latency reductions).

The LTE technology standards have an upcoming set of performance improvements that are set to be rolled out in 2013. This updated version of the standard is commonly known as LTE-Advanced, or LTE-A. Officially, it is known as the Release 10 standard, and continues to be maintained by the 3rd Generation Partnership Project (3GPP) standards body. Since the 3GPP's standards are broadly accepted in the telecommunications industry, there is little risk that they will become obsolete any time soon. Importantly, these standards include backward capability protocols to ensure interoperability between newer and older equipment.

Disadvantages

Spectrum license must be purchased. Operating an LTE network requires a spectrum license from the Federal Communications Commission (FCC).

Roaming and Spectrum Fragmentation. The large number of possible LTE frequency bands and the lack of aligned spectrum allocations by countries' spectrum regulators have led to widespread fragmentation of implementation among infrastructure vendors. This is negatively impacting

the cost of the subscriber (handheld) devices. This is forcing manufacturers to limit the number of frequency bands a given subscriber device model will support. If this persists the aspirational goal of broad interoperability will be thwarted.

Providing Voice Services. Since LTE is a data-only network, a method for provisioning of native voice services must be developed. The two remaining methods are the use of Internet Multimedia Subsystem (IMS) technology or Circuit Switched Fall Back, each having major disadvantages.

The IMS is considered the more reliable method but has high associated capital costs, which cannot easily be afforded by small operators. On the other hand, the less reliable circuit-switched fall back method routes voice calls to an existing voice network that is present, such as a network using these wireless technologies GSM, UTMS, or CDMA 2000.

Construction Costs

The costs for an LTE broadband network include a single cost for the LTE core network and middle mile connection as well as incremental costs per cell site for the towers, electronics, cabling and associated accessories.

4G WiMAX

Description

WiMAX is the trade name for one of the latest wireless communications technology standards, also known as IEEE 802.16. It is considered a 4G wireless technology. Once a rising star technology, it seems now that few major operators will choose this technology going forward, although it has been deployed extensively in the recent past and these networks will remain operational for years to come. It is likely that new WiMAX deployments will be confined to areas that are remote or rural, and to developing nations.

WiMAX is based completely on a packet-switched (data) network, as opposed to hybrid networks that exist where there are separate portions for circuit switched (voice) vs. data traffic. It has been designed to provide high speed data transfer dates in environments most difficult for mobile radio service, where the mobile device is moving at high speed and in dense urban areas.

WiMAX can provide speeds up to 70 Mbps.

Advantages

There are many choices of frequency bands in which to operate WiMAX National WiMAX operator Clearwire uses the 2.5 GHz band in the USA and other domestic deployments are at 3.65 GHz band. Worldwide, the most common WiMAX band is 3.5 GHz as well as 2.3 and 2.5 GHz. The WiMAX network operator can choose various radio spectrum channel bandwidths such as 1.25, 3.5, 5, 7, 8.75, 10, 14, 20, 25, 28 MHz. This offers flexibly in terms of procuring spectrum licenses and managing the spectrum once operating.

WiMAX can be deployed as a time-division duplex scheme or as a frequency division duplex scheme. These methods separate the communications between the uplink (subscriber to tower) and downlink (tower to subscriber) communications giving flexibility in choosing

infrastructure.

WiMAX adapts data rates to each user based on the quality of the user's radio signal. This technique is called adaptive modulation and coding (AMC). The effect of AMC is that users who receive a strong WiMAX signal will get highest speed and throughput service, whereas any user with a weak WiMAX signal will still get service, but at a lower throughput rate.

Disadvantages

- Limited interoperability roaming partnerships with other WiMAX operators due to the technology's eroding market share.
- Some vendors may abandon the WiMAX market as the demand for the technology continues to fall.
- The more worthwhile frequency bands must be leased. It is possible to operate a WiMAX network in the so-called lightly-licensed bands (3.65 GHz), but the better frequency bands do require a license (or lease).
- The promised follow-on WiMAX technology improvements are less likely to materialize given the market preference for LTE (and LTE-A).

Construction Costs

The costs for a WiMAX broadband network include a single cost for the WiMAX core network and middle mile connection as well as incremental costs per cell site for the towers, electronics, cabling and associated accessories.

Wireless Ethernet (Wi-Fi)

Description

Wi-Fi, the trade name for the IEEE802.11 standards and its variants, is a wireless network technology that has been in widespread use since the 1990s. Unlike many commercial wireless services, it does not require a spectrum license to operate Wi-Fi transmitters and receivers. Wi-Fi predominantly operates in the 900 MHz ISM band, the 2.4GHz ISM band (primarily), and the 5.8GHz UNII band. These bands do not require licensing outside of FCC Part 15. Wi-Fi can be deployed in both indoor and outdoor environments. While a range of 1000 feet is commonly mentioned, ranges of up to 10 miles are possible with the use of highly focused antenna beams. Fundamentally, Wi-Fi is an Ethernet technology, but in recent years access point technologies have improved to permit conditional access at OSI Layers 1, 2 and 3, which provides the operator with more control over subscriber usage of the network.

Advantages

One of the primary advantages of Wi-Fi is that it does not require a spectrum license to operate a network. There is nearly 80 MHz of spectrum available in the 2.4GHz band and another 20 MHz in the 900MHz band. Coupled with the extremely low cost for access points and the ubiquity of Wi-Fi compliant laptops, desktops, smartphones, tablet computers, utility-power-company smart-grid devices, and even kitchen appliances, its market success is difficult to downplay. Wi-Fi is simply everywhere. Provided the signal quality is reasonably good and stable, it works very well.

Wi-Fi technology continues to support full backward compatibility, ensuring that older subscriber devices can be used on newer Wi-Fi networks. The protocol allows for restricting how far back a protocol will support, which allows a network operator to decide compatibility versus performance

tradeoffs easily. Wi-Fi can also be operated on multiple radio channels. This allows an operator to provide full compatibility on some channels while offering other compatibility-limited but higher performing channels.

Wi-Fi's support of custom channel widths can be used to reduce contention for Wi-Fi bandwidth by "foreign clients". While this technology variant can be very useful, it is not universally supported.

Wi-Fi adapts data rates to each user based on the quality of the user's radio signal. This technique is called adaptive modulation and coding (AMC). The effect of AMC is that users who receive a strong Wi-Fi signal will get highest speed and throughput service, whereas any user with a weak Wi-Fi signal will still get service, but at a lower throughput rate.

Wi-Fi continues to innovate, and there is little risk that the technology will go obsolete any time soon. Many improvements, such as a MAC layer scheduler and 1Gbps are promised. There are implementations being proposed for the so-called TV Whitespaces frequency bands.

Disadvantages

Wi-Fi was not originally developed as a mobile communications protocol. As such, it has no provision for cell handovers in the same sense as cellular voice channel handovers. However, Wi-Fi networks can be configured to allow for seamless transitioning between access points.

Wi-Fi itself does not implement any means to provision specific service levels to specific users. However, this is often mitigated by using Wi-Fi customer premise equipment (CPE) that allows such control by the network operator. This mitigation comes at the cost of additional network management effort by the operator. This adds some additional cost and management overhead.

Wi-Fi does not provide any special means of enforcing specific Quality of Service (QoS) levels beyond those available at higher layers in the protocol stack.

The transmit power of Wi-Fi devices is limited by FCC regulations, and affects the network's overall range. Highly focused antennas can be used to provide service to small, distant areas requiring Wi-Fi service.

Construction Costs

Wi-Fi is among the most cost-effective wireless networking technologies. Commercial grade access points can range in price from a few hundred to a few thousand dollars each. Installation does not usually require special skills; however more professional antenna systems require some skill. Each access point site can be estimated to cost not more than $5,000 each, unless advanced towers, antennas or structures are required.

Since Wi-Fi is a fairly small-coverage-footprint technology often less than 1/4 square mile a competent network design requires sufficient Wireline backhaul (or point-to-point wireless backhaul). This can impact the cost significantly, but some wireline infrastructures such as HFC can overlay Wi-Fi in its service area for the roughly the incremental cost of the access points. This overlay configuration is a convenient and low-cost wireless broadband supplement to an HFC deployment

Extension of Existing Broadband Wireless Network Via Distributed Antenna System (DAS)

Description	Distributed Antenna Systems (DAS) are used to extend the service area of existing wireless networks. While they can be deployed either indoors or outdoors, the application for Gustavus is an outdoor DAS. A DAS takes the wireless signal from a cell site and re-transmits it at one or more locations far from the cell site. To do this, fiber optic cables are used to carry the signal to the distant location(s) where small antennas radiate the signal. A common application of outdoor DAS is to provide wireless service to an area where residents are unwilling to have visible cell towers in their neighborhood.
Advantages	The use of fiber optic cable to deliver the radio signals avoids the problem of attenuation by trees and other outdoor obstacles.
Disadvantages	Cost and small coverage area per DAS location are the main disadvantages. The coverage area of each DAS antenna is quite small, often being placed at a distance of every few telephone poles. The price per unit is also high, reflecting its specialty purpose of concealing the wireless infrastructure (or at least making it less visible)
Construction Costs	Costs are high for the DAS equipment and fiber must be laid to the specific areas where the antennas will be located (which may be off the main fiber routes)

Extension of Existing Broadband Wireless Network Via Distributed Antenna System (DAS)

Description	A hybrid wireline/wireless network takes advantage of the high speed broadband service levels possible with wireline technologies, together with the convenience of wireless broadband access. In this approach, the homes, businesses, and community anchor institutions would be served by a wireline technology such as HFC, while Wi-Fi hotspots would be deployed in public areas that could provide convenient wireless broadband access to citizens, visitors, and others.
Advantages	Additional users who would not otherwise have access to broadband service would have a convenient means of doing so. Since Wi-Fi devices are so common, this would be a sensible technology to reach non-residents who are bringing their own devices such as laptops and smart phones. The incremental cost of adding this capability is low.
Disadvantages	The main disadvantage to the hybrid network is cost, as essentially two overlapping networks are being constructed and operated to service the same geographic area.
Construction Costs	Construction costs vary and will include components of each of the individual technology construction costs. Some leverage of backhaul costs will reduce the overall construction cost below the cost to construct independent networks.

Appendix B: Pro Forma Business Model Analysis

The following pro forma business model analysis provides a simplified picture of expenses and revenues associated with operating the proposed network. The purpose of this model is to identify key drivers of expenses and revenues in order to develop a general sense of the financial sustainability of the network. Future phases of the City's broadband planning efforts will include the development of more detailed pro forma financial statements that provide a more accurate estimate of expenses, revenues, and financial feasibility. The following assumptions were made in developing this model:

- Using the current number of subscribers to GCN's broadband network as a reference point, it is assumed that the network will begin with 48 subscribers and grow at 18% per year such that the penetration rate reaches approximately 50% of fulltime households over the forecast period.
- Because current GCN customers use between 2.2 and 3.7 GB of data per month, it is assumed that subscribers to an enhanced network will use approximately 4 GB per month upon deployment. As use of the network grows and subscribers discover and use new applications, it is assumed that data use increases by 10% per year.
- Based on estimated data demands and an assumed peak usage window of 12 hours, the number of T1 equivalents needed is calculated for Year 0. In subsequent years it is assumed that middle mile costs are managed as described in the Business Model Recommendations section.
- Each T1 is assumed to cost $1,300 per month; an amount similar to what GCN currently pays.
- Other operating expenses are estimated to be 25% of gross receipts; an amount that is similar to what GCN currently pays Corvid Computing to operate GCN.
- Revenue generated by broadband customers is derived through an average monthly rate of $80 per user; an amount similar to current GCN rates.

	Year 0	Year 1	Year 2	Year 3	Year 4	Year 5
Subscribers	48	57	67	79	93	110
Subscriber Data Use (GB/mo)	4	4	5	5	6	6
Total Annual Data Use (GB)	192	249	323	420	545	707
Middle Mile Expenses						
Average Load in bps per Broadband Subscriber	35,273	38,801	42,681	46,949	51,644	56,808
Bandwidth Needed for Total Projected Users	1,693,122	2,197,672	2,852,578	3,702,647	4,806,035	6,238,234
Number of Equivalent T1s	2	2	2	2	2	2
Cost per T1	$ 1,,300	$ 1,300	$ 1,300	$ 1,300	$ 1,300	$ 1,300
Monthly Middle Mile Cost	$ 2,600	$ 2,600	$ 2,600	$ 2,600	$ 2,600	$ 2,600
Total Middle Mile Costs	$ 31,200	$ 31,200	$ 31,200	$ 31,200	$ 31,200	$ 31,200
Other Operating Expenses	$ 1,520	$ 3,594	$ 16,040	$ 18,927	$ 22,335.	$ 26,355
Total Operating Expenses	$ 42,720	$ 44,794	$ 47,240	$ 50,128	$ 53,535	$ 57,555
Broadband Revenue	$ 46,080	$ 54,374	$ 64,162	$ 75,711	$ 89,339	$ 105,420
Revenue Less Expenses	**$ 3,360**	**$ 9,581**	**$ 16,921**	**$ 25,583**	**$ 35,804**	**$ 47,865**

Appendix C: Construction Financing Options

State Financing Sources

Alaska Grants to Municipalities (AS 37.05.315, "CIP")

Program Purpose	The Alaska Legislature may award grants to local governments for capital improvements.
Description of Funding	Direct grants are available with no set limits. Local or other matching funds may improve chances of award.
Eligible Applicants	Local governments are eligible to apply for funds.
Application Process	The Alaska Legislature solicits CIP requests from local governments as part of its annual capital budget formulation process. There is a simple on-line application form with deadlines typically in the December-February time frame.
Key Factors for Award	Local support, including priorities identified by local governments, are a key factor for awards.
Notes on Applicability to Gustavus	The Alaska Legislature has demonstrated its willingness by funding the project that resulted in this Gustavus Broadband Plan. Given strong local support, this funding source appears to be an excellent possibility for design and construction of the proposed broadband network.

Alaska Municipal Bond Bank Authority

Program Purpose	The Alaska Municipal Bond Bank Authority (AMBBA) makes loans to local governments with the financing of capital projects.
Description of Funding	Direct loans are available with no set limits. Interest rates depend on the national market for tax exempt bond issues.
Eligible Applicants	Local governments are eligible to apply for funds.
Application Process	AMBBA has a standard application that is available on its website. Applications are submitted to AMBBA and reviewed in accordance with its investment policies.
Key Factors for Award	As AMBBA is self-supporting and does not use general funds, the applicant's ability to make principal and interest payments is key.
Notes on Applicability to Gustavus	Gustavus should consider this along with other loan programs based on the City's ability to repay the loan, available interest rates, and likelihood of award.

Rural Alaska Broadband Internet Access Grant Program

Program Purpose	The Rural Alaska Broadband Internet Access Grant Program is administered by the State of Alaska's Department of Commerce, Community and Economic Development (DCCED) and the Regulatory Commission of Alaska (RCA) with funding provided by USDA in order to

	acquire and install equipment, facilities, and systems to provide broadband internet access in qualifying communities in rural Alaska.
Description of Funding	USDA awarded $15 million in grants to the RCA and DCCED, nearly all of which has been committed after five funding rounds. Grant recipients are required to match awards with cash or in-kind contributions equal to at least 25% of the total project costs.
Eligible Applicants	The applicant must be, or partner with, a telecommunications or cable provider. Eligible communities must have more than 19.5% unemployment, a population of less than 20,000, and no broadband Internet access.
Application Process	Applications are accepted by RCA following the announcement of a funding round. During each funding round held to date, RCA has made available an application guide that details the plan the applicants must submit to be considered for funding.
Key Factors for Award	Applications are evaluated based on criteria specified in each funding round's application guide. Applications are evaluated and scored by members of a committee that each award to respective application components.
Notes on Applicability to Gustavus	This program seems unlikely to be helpful in Gustavus. It appears as though all funding has been allocated, but even if there is funding available the community is ineligible because of existing broadband offerings from GCN and ACS's mobile broadband services.

Federal Financing Sources

Federal Communication Commission's High Cost / Connect America Fund Program

Program Purpose	HC fund was established to ensure that consumers in rural markets could receive the benefits of telecommunications at rates comparable to those in urban markets. HC support is primarily used as an incentive in rural areas where economies of scale do not exist and business cases do not warrant unsubsidized deployment or operations by telecommunications providers.
Description of Funding	The FCC is currently modernizing the USF HC fund to the CAF to support broadband in ""unserved"" and "under-served" areas. Components of CAF will support fixed wireline broadband, wireless broadband, and possibly satellite infrastructure. To jumpstart this approach, CAF Phase 1 will provide $300 million to price cap providers to build-out unserved areas. CAF Phase 2 calls for a geography and technology neutral approach for competitive reverse-auctions that would cost-effectively provide a pre-established minimum level of broadband to a set geographic area. The Mobility Fund will provide support to wireless providers to deploy 3G service to unserved areas through a reverse auction.
Eligible Applicants	CAF Phase 1 was offered to incumbent providers in unserved areas. Gustavus is ineligible for Mobility Fund dollars due to the fact that ACS currently provides 3G service within the City. Eligibility for CAF phase 2 is dependent on Phase 1 and other factors still to be determined.

Application Process

CAF Phase 2 funding will be awarded through competitive reverse-auction. The mechanics of the auction have not been announced by FCC.

Notes on Applicability to Gustavus

Gustavus incumbent local exchange carrier Alaska Communications (ACS) has accepted nearly $4.2 million in federal Connect America Phase 1 funds from the Federal Communications Commission. In exchange for a one-time payment of $775 per subscriber, ACS has committed to upgrade Internet service to 4 Megabits/second down and 1 Megabit/sec up (except in communities, unlike Gustavus, served only by satellite) for about 14,500 customers in communities currently "unserved by fixed broadband." ACS is not saying publicly which communities will be upgraded or how it will be done, but they told the authors of this plan that they did not accept CAF Phase 1 funding for Gustavus and that they have no plans to upgrade service here. The City may be able pursue funding in CAF Phase 2.

Rural Utility Service's Broadband Loan and Loan Guarantee Program

Program Purpose

Broadband loans provide funding for: the construction, improvement, and acquisition of all facilities required to provide service at the broadband lending speed to rural areas, including facilities required for providing other services over the same facilities; the cost of leasing facilities required to provide service at the broadband lending speed if such lease qualifies as a capital lease under Generally Accepted Accounting Principles (GAAP); or an acquisition, under certain circumstances and with restrictions.

Description of Funding

Loans are made at the "cost of money" or at 4% to eligible applicants proposing to deploy broadband service to eligible rural areas.

Eligible Applicants

- Corporations
- Limited liability companies
- Cooperatives or mutual organizations
- Federally recognized Indian tribes or tribal organizations
- State or local governments including any agency, subdivision, or one of their units

Application Process

Applications are accepted on a rolling basis and should be put together using the RUS's application guide. Applications are expected to be thorough and awards are made following a rigorous review process by RUS.

Key Factors for Award

To be eligible for a broadband loan all of the following are true:

- The service area is completely contained within a rural area;
- At least 25 percent of the households in the service area are underserved households;
- No part of the service area has three or more incumbent service providers;
- No part of the funded service area overlaps with the service area of current RUS borrowers and grantees;
- No part of the funded service area is included in a pending application before RUS seeking funding to provide broadband service.

The application must also show financial feasibility, including a minimum equity position equal to 10 percent of the requested loan amount at the

	time of application which must remain available at loan closing. Additional equity may be required depending on the results of RUS's underwriting. The application must also demonstrate that their entire operation will be able to meet a minimum TIER requirement equal to 1.25 by the end of a five-year forecast period.
Notes on Applicability to Gustavus	If the city can meet the equity requirement and is capable of demonstrating that it can repay the loan, this is a good source of funding. The application and review process can be burdensome, so it is strongly advised that the city invest time upfront determining whether it can meet the financial requirements.

Rural Utility Service's Community Connect Program

Program Purpose	The Community Connect Grant Program provides financial assistance in the form of grants to eligible applicants that will provide, on a ''community-oriented connectivity'' basis, broadband transmission service that fosters economic growth and delivers enhanced educational, health care, and public safety services.
Description of Funding	Grants are made available to serve rural areas where broadband service does not currently exist, provided that: service will be made available to one Community recognized in the latest U.S. Census or the latest edition of the Rand McNally Atlas; that basic broadband transmission service, free of all charges for at least 2 years, will be provided to all Critical Community Facilities located within the proposed service area; basic broadband transmission service will be made available to residential and business customers within the proposed service area; and a community center will be provided with at least ten computer access points to which broadband service will be provided free of all charges to users for at least 2 years.
Eligible Applicants	▪ Incorporated Organizations ▪ Indian Tribes or Tribal Organizations ▪ State or local units of government ▪ Cooperative, private corporations or limited liability companies, organized on a for-profit or not-for-profit basis
Application Process	Applications are accepted in response to a notice of funding availability published annually in the Federal Register. RUS makes an application guide available for use by applicants.
Key Factors for Award	The grant applicant must contribute a matching contribution of at least fifteen percent of the grant amount requested.
Notes on Applicability to Gustavus	This may be the ideal funding source for Gustavus except that the city's efforts to make broadband access available have likely rendered it ineligible for award. If any part of the proposed service area already has access to a connection of at least 200 kilobits/second both down- and up-stream, then the application will be deemed ineligible. Both GCN's broadband services and ACS's mobile broadband services likely surpass 200 kilobits/second.

Rural Utility Service's Telecommunications Infrastructure Loan Program

Program Purpose	The Telecommunications Infrastructure Loan Program makes Long-term direct and guaranteed loans to qualified organizations for the purpose of financing the improvement, expansion, construction, acquisition, and operation of telephone lines, facilities, or systems to furnish and improve Telecommunications service in rural areas.
Description of Funding	Loans are made at the "cost of money to eligible applicants proposing to deploy telephone and broadband service to eligible rural areas.
Eligible Applicants	▪ Rural utilities ▪ Municipalities ▪ Commercial corporations ▪ Limited liability companies ▪ Public utility districts ▪ Indian tribes ▪ Cooperative, nonprofit, limited-dividend, or mutual associations
Application Process	Applications are accepted year round on a rolling basis. Telecommunications Infrastructure Loan Program should contact their local General Field Representative for detailed information on application requirements. All applications must be submitted through the local General Field Representative.
Key Factors for Award	Like the Broadband Loan and Loan Guarantee Program, the application must show financial feasibility including the ability to repay the loan as demonstrated through a specified TIER ratio. Awards are also dependent on compliance with a 'nonduplication' rule that essentially prohibits an award from being made to an entity proposing a service area that is already serviced by existing carriers.
Notes on Applicability to Gustavus	Given that Gustavus is already served by a telephone company it seems unlikely that this would be an appropriate source of funding. It could perhaps be used if the City wishes to purchase and upgrade the existing telephony infrastructure in order to provide residents with DSL service.

Rural Business Service's Business and Industry Guaranteed Loan Program

Program Purpose	The Business and Industry (B&I) Guaranteed Loan Program finances business, industry, and employment opportunities to improve the economic and environmental climate in rural communities. This purpose is achieved by bolstering the existing private credit structure through the guarantee of quality loans which will provide lasting community benefits.
Description of Funding	USDA guarantees loans that are made by participating lending institutions that make loans under the program to applicants that: ▪ Provide employment; ▪ Improve the economic or environmental climate; ▪ Promote the conservation, development, and use of water for aquaculture; or ▪ Reduce reliance on nonrenewable energy resources by encouraging

	the development and construction of solar energy systems and other renewable energy systems.
Eligible Applicants	▪ Cooperative organization ▪ Corporation, partnership, or other legal entity organized and operated on a profit or nonprofit basis ▪ Indian tribe on a Federal or State reservation or other Federally recognized tribal group ▪ Public body ▪ An individual
Application Process	Loan applications are available from and submitted to RD state offices.
Key Factors for Award	Loans are made to viable businesses that serve purposes that are consistent with the general purpose contained in the regulation, which include the following: ▪ Business and industrial acquisitions when the loan will keep the business from closing, prevent the loss of employment opportunities, or provide expanded job opportunities. ▪ Business conversion, enlargement, repair, modernization, or development. ▪ Purchase and development of land, easements, rights-of-way, buildings, or facilities. ▪ Purchase of equipment, leasehold improvements, machinery, supplies, or inventory.
Notes on Applicability to Gustavus	If the city can develop a financial viable business model, this could be a source of funding as the program has recently been used to deploy and upgrade broadband service in rural communities.

Economic Development Administration's Public Works Program

Program Purpose	These program funds strategic public works investments to support the construction or rehabilitation of essential public infrastructure and facilities to help communities and regions leverage their resources and strengths to create jobs, drive innovation, become centers of competition in the global economy, and ensure resilient economies.
Description of Funding	Funding is available in the form of grants of up to 50% of project costs. Projects may receive up to an additional 30 percent, based on the relative needs of the region in which the project will be located, as determined by EDA. In the case of EDA investment assistance to a(n) (i) Indian Tribe, (ii) State (or political subdivision of a State) that the Assistant Secretary determines has exhausted its effective taxing and borrowing capacity, or (iii) non-profit organization that the Assistant Secretary determines has exhausted its effective borrowing capacity, the Assistant Secretary has the discretion to establish a maximum EDA investment rate of up to 100 percent of the total project cost.

Eligible Applicants

- District Organization of a designated Economic Development District
- Indian Tribe or a consortium of Indian Tribes
- State, city, or other political subdivision of a State, including a special purpose unit of a State or local government engaged in economic or infrastructure development activities, or a consortium of political subdivisions
- Institution of higher education or a consortium of institutions of higher education
- Public or private non-profit organization or association acting in cooperation with officials of a political subdivision of a State

Application Process

EDA accepts applications during funding cycles identified in a Federal Funding Opportunity (FFO) announcement that is published annually. The last FFO published by EDA included the final three cycles for FY 2012 and the first cycle for FY 2013. The deadline for applications to the first FY 2013 funding cycle is September 14, 2012. EDA encourages applications to be submitted via grants.gov

Key Factors for Award

To be eligible under this FFO, a project must be located in a region that, on the date EDA receives the application for investment assistance, meets one (or more) of the following economic distress criteria:

- An unemployment rate that is, for the most recent 24-month period for which data are available, at least one percentage point greater than the national average unemployment rate;
- Per capita income that is, for the most recent period for which data are available, 80 percent;
- Special need circumstances including the closure or restructuring of industrial firms or loss of a major employer essential to the regional economy, substantial out-migration or population loss, underemployment, military base closures or realignments, natural or other major disasters, extraordinary depletion of natural resources, communities undergoing changes to their economic base as a result of shifting trade patterns, or other special needs or extraordinary circumstances as determined by the Assistant Secretary.

Projects must be consistent with the region's Comprehensive Economic Development Strategy (CEDS) and documentation confirming non-EDA funding, for example letters of commitment and other documentation must be provided.

Notes on Applicability to Gustavus

Gustavus has some experience with this program as it appears to have funded, at least in part, the city's new boat harbor improvements. This program has not traditionally funded broadband deployment, but recent EDA statements indicate that it could be used for such activities. However, EDA's emphasis is on regional economic development and it seems unlikely that a grant would be awarded to deploy broadband in Gustavus without being part of a larger regional effort.

National Telecommunications & Information Administration's FirstNet

Program Purpose

Administered jointly by the National Telecommunications & Information Administration (NTIA) and the National Institute for Standards &

	Technology (NIST), FirstNet is a new program intended to fund the deployment of nationwide interoperable broadband network that will help police, firefighters, emergency medical service professionals and other public safety officials. The new "First Responder Network Authority" (FirstNet), an independent authority within NTIA, will hold the spectrum license for the network for single, national network architecture, and is charged with taking “all actions necessary” to build, deploy, and operate the network, in consultation with Federal, State, tribal and local public safety entities, and other key stakeholders.
Description of Funding	$7 billion in funding is available for deployment of this network, as well as $135 million for a new State and Local Implementation Grant Program administered by NTIA to support State, regional, tribal and local jurisdictions’ efforts to plan and work with FirstNet to ensure the network meets their wireless public safety communications needs.
Notes on Applicability to Gustavus	FirstNet is still in its infancy and implementation details are being worked out by the appropriate agencies. For instance, NTIA released a request for information in May seeking input on how to implement the new State and Local Implementation Grant Program. It is worth keeping an eye on this program and opportunities it might present in Gustavus.

Passion. **Expertise. Results.**

icfi.com